H-BAU TECHNIK

KE ANCHORS

SAFELY TRANSPORT TWIN WALL PANELS

Forward Constructing.

OUR MISSION: FORWARD CONSTRUCTING.

It is our mission not only to provide the very latest building technology, but to also be one crucial step ahead of the game at all times. That is why we are constantly undertaking pioneering work in all product areas. Our employees consistently put their extensive practical experience and creativity to use in the interests of our customers. In constant dialogue with our target groups on a partnership basis, we are already developing the products today that will be needed tomorrow. Our momentum continues to set new benchmarks in structural engineering – yesterday, today and tomorrow, too. This is what we mean by "forward constructing".

CONTENTS

04
KE transport anchors
Safely transport twin wall panels

06
Application
Loading
Anchor spacing and edge distances

08
Product details
Dimensions

10
Use
Anchor width
Boundary conditions

14
Dimensioning
Verification of applied loads

16
Service & contact
We are always there for you.
We will be wherever you are.

KE transport anchors

SAFELY TRANSPORT TWIN WALL PANELS

THE PRODUCT

The design of the KE transport anchor enables it to be easily integrated into the production process. It can be assembled with the reinforcement girder in any position. This ensures versatility to accomodate different panel designs and cost efficiency.

ADVANTAGES

- CE mark
- quality-monitored
- Two ranges of anchors enable cost-effective product selection to meet the required load performance.

APPLICATION AREA

KE transport anchors are used to rotate, transport and position element walls throughout the entire manufacturing and installation process, whether it be in the pre-cast factory or the building site. Due to the diversity and design of KE transport anchors, these products are unique in terms of their technical, economic and safety characteristics.

PRELIMINARY NOTE

In order to ensure the highest possible levels of safety and reliability, KE anchors are subject to exhaustive testing and quality monitoring. The range of versions available enable cost-effective matching of products to the required load-bearing capacity.

The KE transport anchor is divided into load ranges III and IV.
These products are manufactured using ductile smooth steel and without welds. This ensures no weld embrittlement of the material in areas that are subject to load, and reliable load transfer over the entire length of the anchor.

KE TRANSPORT ANCHORS

- CE marking
- Quality-monitored and certified in accordance with VDI/BV-BS 6205 and the Machinery Directive 2006/42/EC
- Anchor made of S355 smooth steel
- Technically approved braces made of laminated veneer lumber
- Anchor hoop made of B500B
- Two load ranges
- Anchor widths of 130–350 mm

KE III

KE IV

In accordance with guideline VDI/BV-BS 6205, the transport anchors are divided into load ranges III and IV. The KE III anchor is designed for loads associated with normal component sizes and transport conditions. The KE IV anchor is used for particularly heavy components.

APPLICATION

LOADING

When discussing loads, it is important to distinguish between the tension and shear loads associated with handling pre-cast components

Load types:

TENSION LOADS

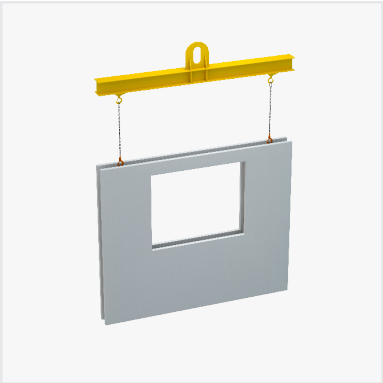

Axial pull, β = 0°

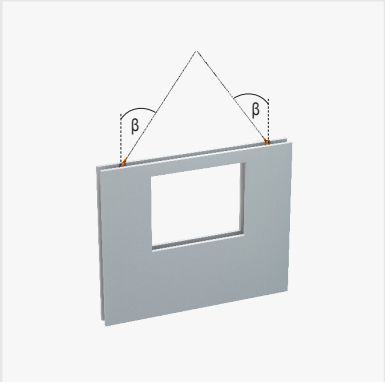

Diagonal pull, 0° ≤ β ≤ 45°

TRANSVERSE SHEAR LOADS

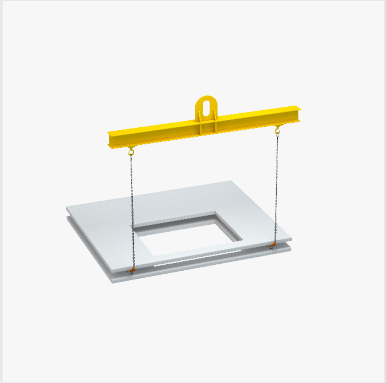

Transverse pull, β = 0°

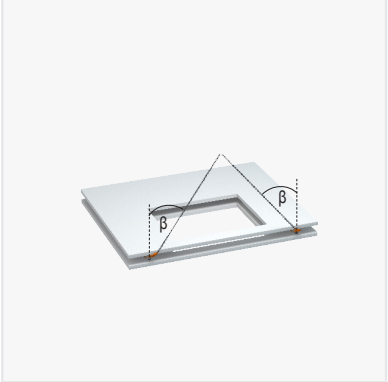

Diagonal transverse pull, 0° ≤ β ≤ 45°

TURNING

90° transverse pull

ANCHOR SPACING AND EDGE DISTANCES

Installation away from edges

- KE III
  - a_{ra} ≥ 200 mm
  - a_{ri} ≥ 200 mm
- KE IV
  - a_{ra} ≥ 400 mm
  - a_{ri} ≥ 400 mm

Installation close to edges

- KE III
  - a_{ra} ≥ 125 mm
  - a_{ri} ≥ 125 mm
  - h_G ≥ 200 mm

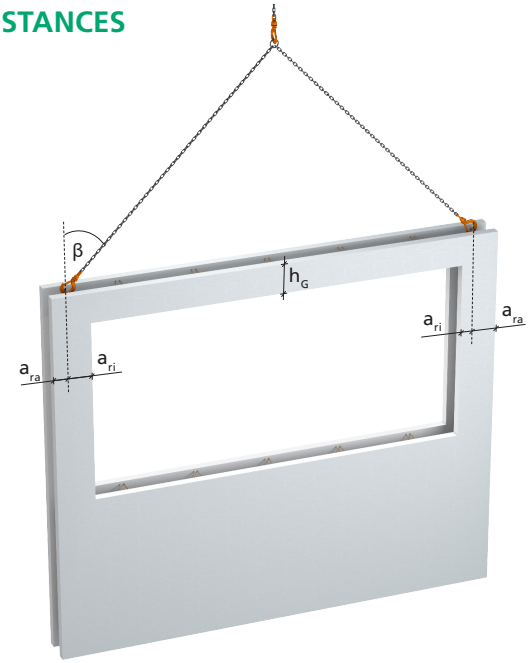

NOTE

- The concrete area above the opening is subject to compression loads under diagonal pull and diagonal transverse pull. It must be checked with reference to these loads.
- In the event of applications requiring reduced edge distances, please contact our technical department

APPLICATION

TENSION LOADS

Axial pull

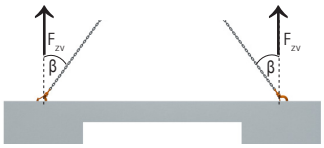

Diagonal pull

TRANSVERSE SHEAR LOADS

Transverse pull

Diagonal transverse pull

TURNING

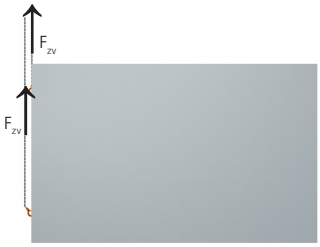

90° transverse pull

LOAD CAPACITY OF ANCHORS LOCATED AWAY FROM EDGES

Vertical load proportion per anchor F_{ZV} [kN]		KE III Concrete strength $f_{c,cube150}$ [N/mm²]			KE IV Concrete strength $f_{c,cube150}$ [N/mm²]		
	Load angle	15	20	25	15	20	25
Tension loads	β = 0°	22.5	25.9	29.0	44.1	50.9	56.9
	β = 30°	19.5	22.4	25.1	38.2	44.1	49.3
	β = 45°	15.9	18.3	20.5	31.2	36.0	40.2
Transverse shear loads	β = 0°	8.7	10.0	11.2	10.6	12.2	13.7
	β = 30°	7.5	8.7	9.7	9.2	10.6	11.9
	β = 45°	6.2	7.1	7.9	7.5	8.6	9.7
Turning	–	16.1			25.0		

LOAD CAPACITY OF ANCHORS LOCATED CLOSE TO EDGES

Vertical load proportion per anchor F_{ZV} [kN]		KE III Concrete strength $f_{c,cube150}$ [N/mm²]		
	Load angle	15	20	25
Tension loads	0° ≤ β ≤ 45°	12.5	14.0	15.5

NOTE

- The tables relate to the vertical load capacity F_{ZV} of a single anchor.
- Allowable loads for panel handling applicable for concrete cover cnom ≥ 30 mm (safety factor of 3.0)
- When applying the load values, please also check the applicable factors and recommendations shown on pages 13, 14 and 15
- When anchors are installed close to edges, the anchors should not be subjected to transverse shear loads. The precast units should be rotated to the vertical position using a tilting table before using the anchors to lift them.
- The specified anchor loads apply to undamaged components. For this reason, the components must be inspected for damage prior to every lifting process.

PRODUCT DETAILS

DIMENSIONS

Type	KE III			KE IV		
	Dimensions [mm]			Dimensions [mm]		
	b	l	l_u	b	l	l_u
120	120	515	365	120	750	600
130	130	515	365	130	750	600
140	140	515	365	140	750	600
150	150	515	365	150	750	600
160	160	515	365	160	750	600
170	170	515	365	170	750	600
180	180	565	365	180	800	600
190	190	565	365	190	800	600
200	200	565	365	200	800	600
210	210	565	365	210	800	600
220	220	565	365	220	800	600
230	230	565	365	230	800	600
240	240	565	365	240	800	600
250	250	615	365	250	850	600
260	260	615	365	260	850	600
270	270	615	365	270	850	600
280	280	615	365	280	850	600
290	290	615	365	290	850	600
300	300	615	365	300	850	600
310	310	645	365	310	880	600
320	320	645	365	320	880	600
330	330	645	365	330	880	600
340	340	645	365	340	880	600
350	350	645	365	350	880	600

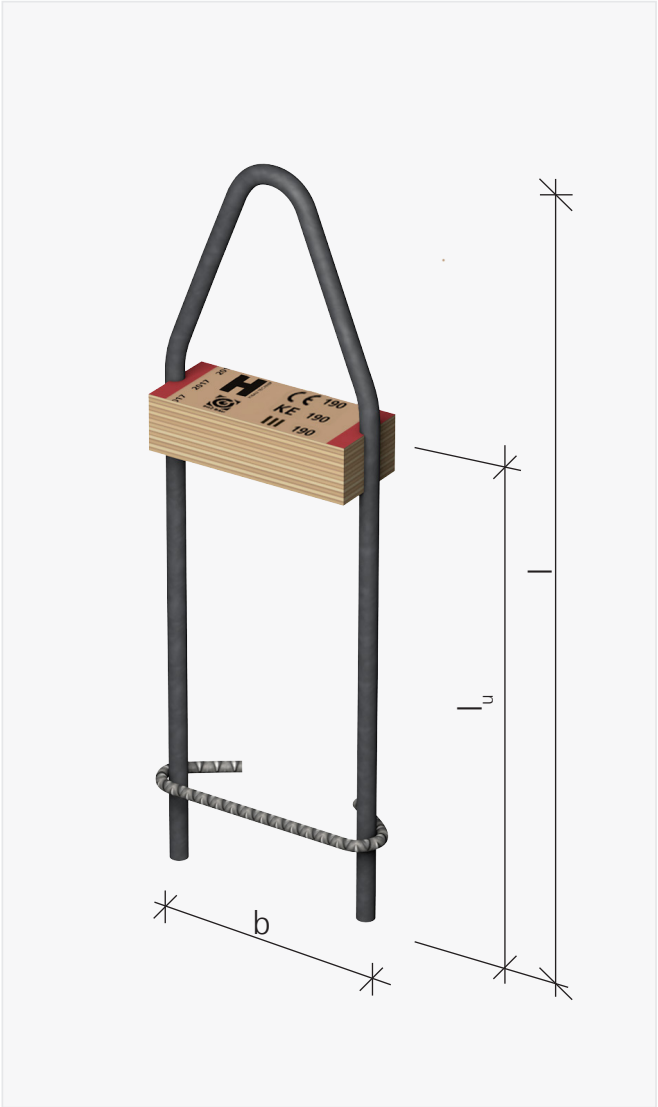

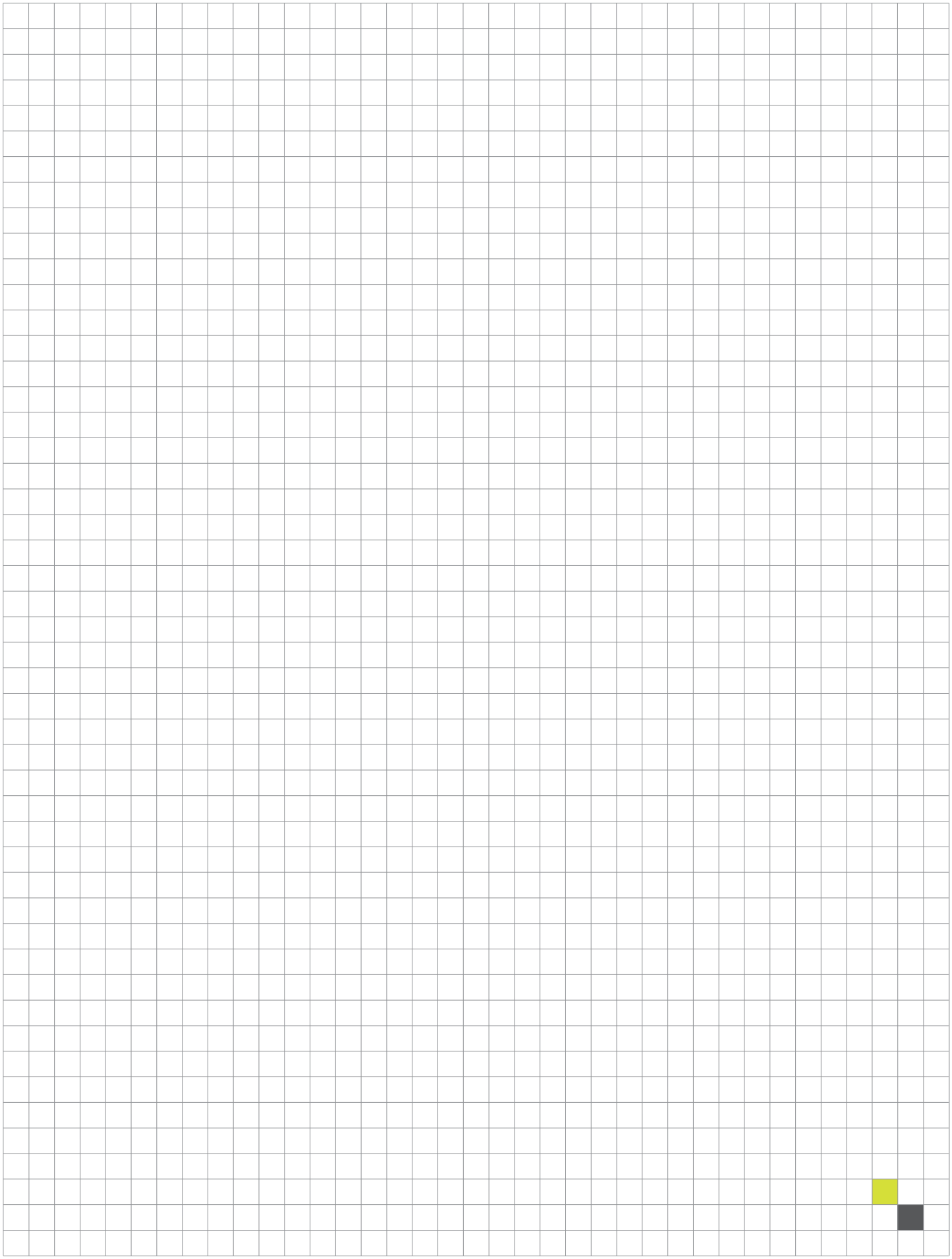

USE

CALCULATING THE REQUIRED ANCHOR WIDTH:

The required anchor width (b) depends on the structure of the panel.

INSTALLATION OF THE TRANSPORT ANCHOR PARALLEL TO THE REINFORCEMENT GIRDER

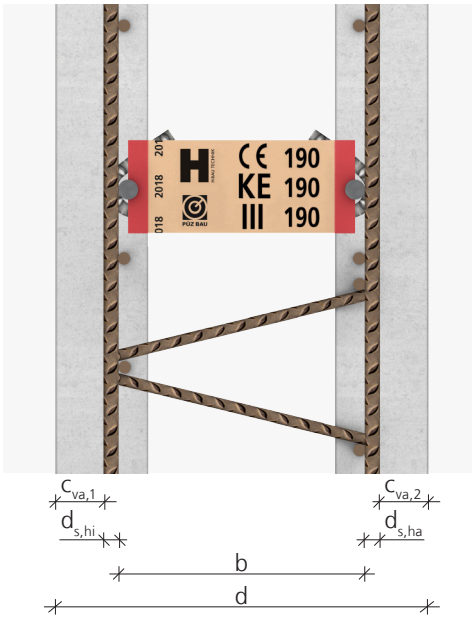

Calculating the required anchor width:

$$b = d - c_{va,1} - c_{va,2} - d_{s,hi} - d_{s,ha}$$

b = Transport anchor width
d = Wall width
$c_{va,1}$ = Reinforcement concrete cover in internal leaf
$c_{va,2}$ = Reinforcement concrete cover in external leaf
$d_{s,hi}$ = Horizontal reinforcement diameter in internal leaf
$d_{s,ha}$ = Horizontal reinforcement diameter in external leaf

In general, the transport anchor width is equal to the braced girder height

INSTALLATION OF THE TRANSPORT ANCHOR PERPENDICULAR TO REINFORCEMENT GIRDER

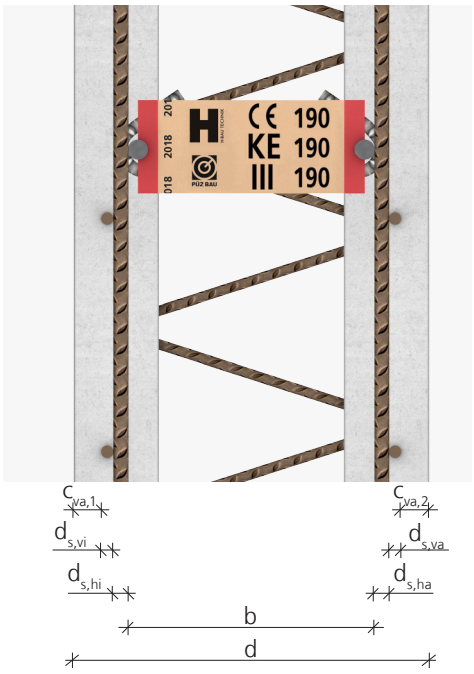

Calculating the required anchor width:

$$b = d - c_{va,1} - c_{va,2} - d_{s,hi} - d_{s,ha} - d_{s,vi} - d_{s,va}$$

b = Transport anchor width
d = Wall width
$c_{va,1}$ = Reinforcement concrete cover in internal leaf
$c_{va,2}$ = Reinforcement concrete cover in external leaf
$d_{s,hi}$ = Horizontal reinforcement diameter in internal leaf
$d_{s,ha}$ = Horizontal reinforcement diameter in external leaf
$d_{s,vi}$ = Vertical reinforcement diameter in internal leaf
$d_{s,va}$ = Vertical reinforcement diameter in external leaf

USE

BOUNDARY CONDITIONS

Installation position of the KE transport anchors

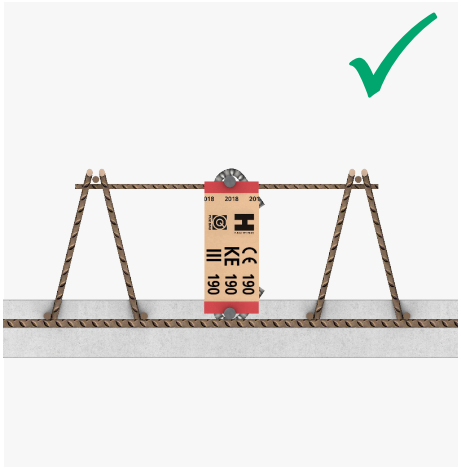

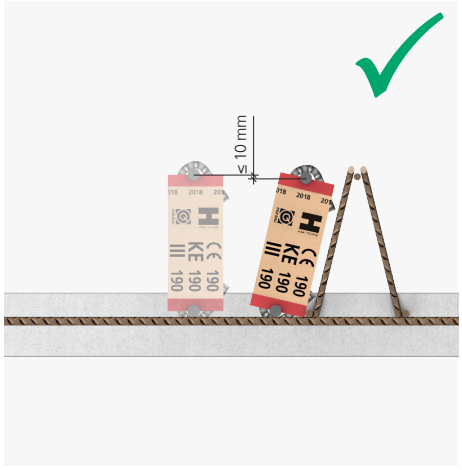

Concrete embedment:
The red marking must be completely encased in concrete.

Concrete embedment:
The red marking must be completely encased in concrete.

Minimum concrete cover:
KE III: $c_{vi} \geq 10$ mm, $c_{va} \geq c_{nom} \geq 20$ mm
KE IV: $c_{vi} \geq 18$ mm, $c_{va} \geq c_{nom} \geq 20$ mm

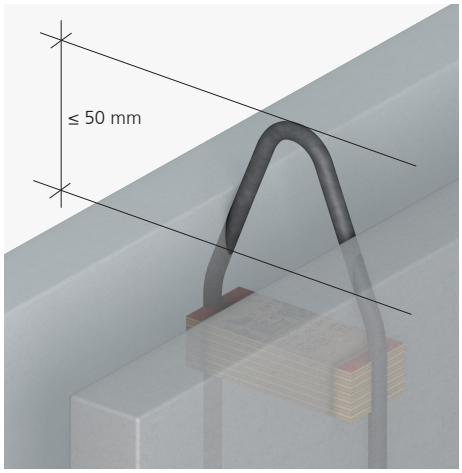

USE

BOUNDARY CONDITIONS

Twin wall requirements

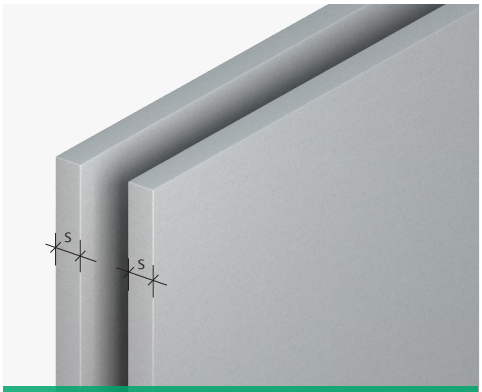

Leaf thickness:
KE III: s ≥ 50 mm
KE IV: s ≥ 60 mm

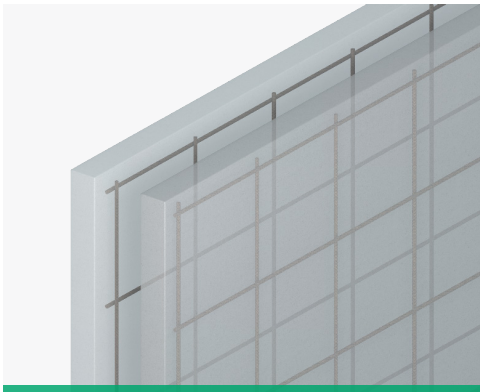

Minimum reinforcement:
Dia. 6/20

Tension lifts

Anchors located away from edges:
Horizontal edge reinforcement diameter d_s ≥ 10 mm, reinforcement girder to outside of anchor position

Anchors located close to edges:
Horizontal and vertical edge reinforcement diameter d_s ≥ 10 mm, reinforcement girder placed between opening and anchor position

Transverse lifts

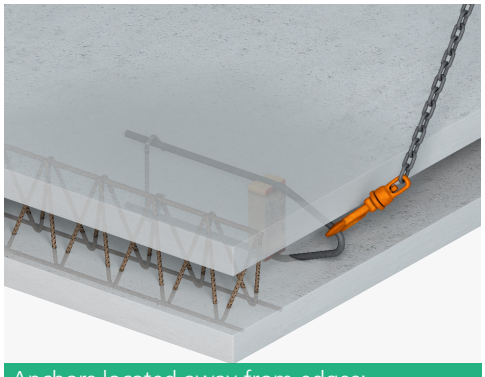

Anchors located away from edges:
For transverse lifts position the reinforcement girder between the anchor and the edge of the panel

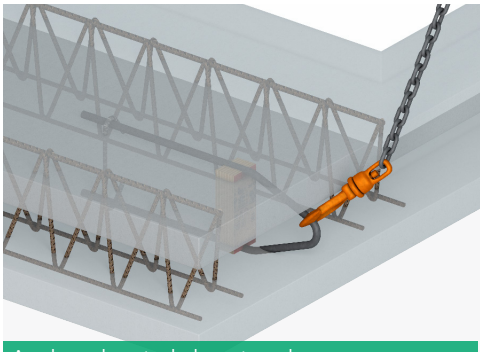

Anchors located close to edges:
For transverse lifts position the reinforcement girder between the anchor and the edge of the panel and also between the anchor and any interior opening

USE

BOUNDARY CONDITIONS

Number and position of the KE transport anchors

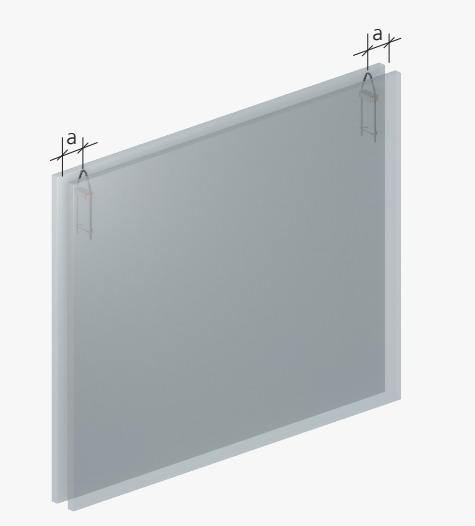

- Anchors located away from edges
  Distance from edge KE III: a ≥ 200 mm
  Distance from edge KE IV: a ≥ 400 mm
- Anchors located close to edges
  Distance from edge KE III: a ≥ 125 mm
  See also information on page 6
- The load must be equally distributed across the anchors

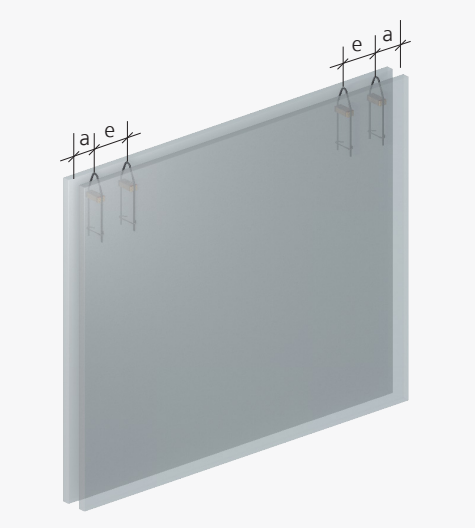

- Minimum edge distances
  Distance from edge KE III: a ≥ 200 mm
  Distance from edge KE IV: a ≥ 400 mm
- Minimum spacing dimensions
  Distance from centre KE III: e ≥ 300 mm
  Distance from centre KE IV: e ≥ 600 mm
- The load must be equally distributed across the anchors
- When using 4 anchors per panel, the anchor loads provided on page 7 must be multiplied by the safety factor $\Psi_4 = 0.75$.

NOTE

- Minimum concrete strength at the time of initial lifting $f_{c,\,cube150} \geq 15$ N/mm².
- Two or four transport anchors must be used for each pre-cast component.
- Minimum internal spacing between anchors 900 mm
- The transport anchors must be installed so that they are symmetrical in relation to the centre of gravity in order to ensure even load distribution.
- If the transport anchors are subject to unequal loads, the different effects of the loads must be taken into account.

DIMENSIONING

CALCULATING THE LOADS

To determine the relevant loads on the transport anchor, the entire production, storage, transportation and assembly process must be considered and all relevant stresses must be taken into account. The relevant stresses may differ depending on the component geometry, transportation conditions and boundary conditions, and for this reason, the transport anchors must be designed separately for each project and each component.

The parameters of static system, weight, formwork adhesion, dynamic effects and the position and number of transport anchors must be determined. Additional stresses may occur in relation to specific panel designs, and in these cases must also be taken into account.

1. Weight
When determining the self-weight, the relevant concrete volume with a density of 25 kN/m³ must be used.
Any additional loads must be taken into account accordingly.

Weight of the pre-cast component F_G [kN]
$F_G = 25\ kN/m^3 \cdot V + Z$
V = Concrete volume of the pre-cast component in m³
Z = Additional loads in kN

2. Formwork adhesion
When pre-cast components are lifted from the formwork, they are acted on by adhesion forces differing in strength depending on the formwork shell used. The following reference values are specified in the guideline VDI/BV-BS 6205 as examples:

Load from formwork adhesion F_{adh} [kN]
$F_{adh} = q_{adh} \cdot A_f$
q_{adh} = Basic value of the formwork adhesion in kN/m²
A_f = Contact surface between the concrete and formwork in m²

Formwork type	q_{adh} [kN/m²]
Oiled steel or plastic formwork	≥ 1.0
Lacquered wood formwork	≥ 2.0
Bare wood formwork	≥ 3.0

3. Dynamic loads
When pre-cast components are lifted, transported and set down, they are subject to shock stresses. The magnitude of these stresses is determined by the type of lifting device used and is taken into account using the dynamic factor Ψ_{dyn}. It is also possible for a variety of lifting devices to be used over the course of the transportation chain. The relevant dynamic factor must be determined. The calculated loads must be multiplied by this factor. The following reference values are specified in the guideline VDI/BV-BS 6205 as examples:

Lifting device	Ψ_{dyn} []
Rotating tower crane	1.3
Truck-mounted crane	1.3
Gantry crane	1.3
Transportation on even terrain	2.5
Transportation on uneven terrain	≥ 4

DIMENSIONING

VERIFICATION

The following must be checked:

- $F_{Rd} \geq F_{Ed}$

  F_{Rd} Rated load that can be accommodated by the anchor
  F_{Ed} Applied rated load

NOTE:
The load capacity of the anchors will vary according to the different types of load applied during the installation and manufacturing process. Please refer to pages 6 and 7 for details of these capacities.

The rated load that can be accommodated is calculated as follows:

- $F_{Rd} = n \cdot F_{ZV} \cdot \Psi_n$

  F_{ZV} Load in accordance with the information on page 7
  n Number of anchors used per panel (two or four anchors)
  $\Psi_n = \Psi_2 = 1.0$ When using two anchors
  $\Psi_n = \Psi_4 = 0.75$ When using four anchors

The rated load that is applied is calculated as follows:

- Transverse shear

  $$F_{Ed} = \left(\frac{F_G}{2} + F_{adh} \right) \cdot \Psi_{dyn}$$

  F_G Weight of the pre-cast component in accordance with the information on page 14
  F_{adh} Load from formwork adhesion in accordance with the information on page 14
  Ψ_{dyn} Dynamic factor in accordance with the information on page 14

- Tension

  $F_{Ed} = F_G \cdot \Psi_{dyn}$

  F_G Load in accordance with the information on page 14
  Ψ_{dyn} Dynamic factor in accordance with the information on page 14

- Turning

  $$F_{Ed} = \frac{F_G}{2} \cdot \Psi_{dyn}$$

  F_G Weight of the pre-cast component in accordance with the information on page 14
  Ψ_{dyn} Dynamic factor in accordance with the information on page 14

FORWARD CONSTRUCTING:
WE ARE ALWAYS THERE FOR YOU.

You can rely on our excellent service: We accompany you through every phase of the project – either over the phone, online or in person, directly at your site. As a true partner, we place special value on offering our customers added value – take a look at our comprehensive range of services and see for yourself.

EVERYTHING ONLINE:
OUR DOWNLOAD AREA.
You can download all our brochures, test reports, approvals, current price list and much more from our website.

FOR PLANNING AND APPLICATION:
OUR VIDEOS AND SOFTWARE.
In addition to our installation and reference films, we also provide you with various software solutions, such as calculation programs, free of charge on our website.

TAILOR-MADE:
OUR CUSTOM SOLUTIONS.
Unable to find what you're looking for in our wide range of products and services? Our engineers and applications engineers will develop individual product solutions on request to meet your needs.

HOTLINES

Personalised support when designing and building projects:

APPLICATION TECHNOLOGY

Hotline: +49 (0) 7742 9215-300
E-mail: technik@h-bau.de

Answers to any questions you have about delivery times, shipping, sales prices and the entire process of fulfilling your orders:

SALES (GERMANY)

Hotline: +49 (0) 7742 9215-200
E-mail: vertrieb@h-bau.de

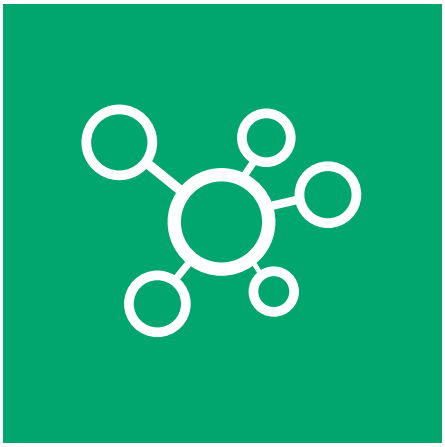

FROM PERSON TO PERSON:
OUR NETWORK OF CONSULTANTS.
Get the answers to your technical questions face-to-face at your site: Our consultant engineers will be happy to come to your site.

Answers to any questions you have about delivery times, shipping, sales prices and the entire process of fulfilling your orders at an international level:

SALES (INTERNATIONAL)

Hotline: +49 (0) 7742 9215-250
E-mail: export@h-bau.de

We will be happy to send you our technical brochures and documents:

HEAD OFFICE

Hotline: +49 (0) 7742 9215-0
E-mail: info@h-bau.de

FORWARD CONSTRUCTING CONTACTS: WE WILL BE WHEREVER YOU ARE.

Thanks to our global sales network, expert specialist advisors are available to you on a national level and on an international level. If there is no contact partner listed for your country, contact our Head Office in Klettgau – we will be happy to provide you with further assistance.

HEAD OFFICE

H-BAU TECHNIK GMBH
Am Güterbahnhof 20
79771 Klettgau, Germany
Tel.: +49 (0) 7742 9215-0
Fax: +49 7742 9215-129
E-mail: info@h-bau.de
www.h-bau.de

PRODUCTION: NORTH-EAST
Brandenburger Allee 30
14641 Nauen OT Wachow, Germany
Tel.: +49 (0) 33239 775-0
Fax: +49 (0) 33239 775-90
E-mail: info.berlin@h-bau.de

PRODUCTION: CHEMNITZ
Beyerstraße 21
09113 Chemnitz, Germany
Tel.: +49 (0) 371 40041-0
Fax: +49 (0) 371 40041-99
E-mail: info.chemnitz@h-bau.de

JORDAHL H-BAU VERTRIEBS GMBH

Our products are sold in Germany exclusively through the following subsidiaries of JORDAHL H-BAU Vertriebs GmbH:

ESSEN
JORDAHL H-BAU Vertriebs GmbH
Carnaperhof 7
45329 Essen, Germany
Tel.: +49 (0) 201 289660
Fax: +49 (0) 201 2896620
E-mail: essen@jordahl-hbau.de

NÜRNBERG
JORDAHL H-BAU Vertriebs GmbH
Lechstraße 21
90451 Nürnberg, Germany
Tel.: +49 (0) 911 6412980
Fax: +49 (0) 911 6496099
E-mail: nuernberg@jordahl-hbau.de

MANNHEIM
JORDAHL H-BAU Vertriebs GmbH
Markircher Straße 14
68229 Mannheim, Germany
Tel.: +49 (0) 621 4840340
Fax: +49 (0) 621 4840344
E-mail: mannheim@jordahl-hbau.de

You are also welcome to contact our Head Office in Klettgau directly.

GLOBAL PARTNERS

SWITZERLAND
JORDAHL H-BAU AG
Wasterkingerweg 2
8193 Eglisau, Switzerland
Tel.: +41 (0) 44 8071717
Fax: +41 44 8071718
E-mail: info@jordahl-hbau.ch
www.jordahl-hbau.ch

AUSTRIA
JORDAHL H-BAU
Österreich GmbH
Straubingstrasse 19
4030 Linz, Austria
Tel: +43 (0) 732 321900
Fax: +43 (0) 732 321900-99
E-mail: office@jordahl-hbau.at
www.jordahl-hbau.at

FRANCE
JORDAHL H-BAU France SARL
Siège
7 rue des Vallières Sud
25220 Chalezeule, France
Tel.: +33 (0) 381 250465
Fax: +33 (0) 381 250796
E-mail: info@jordahl-hbau.fr
www.jordahl-hbau.fr

NETHERLANDS
JORDAHL H-BAU
Bezoekadres
Jan Tinbergenstraat 221
7559 SP Hengelo, Netherlands
Tel.: +31 (0) 74 2505737
Fax: +31 (0) 74 2503321
E-mail: info@jordahl-hbau.nl
www.jordahl-hbau.nl

DENMARK
Jordahl & Pfeifer Byggeteknik A/S
Risgårdevej 66
9640 Farsø, Denmark
Tel.: +45 (0) 98 631900
Tel.: +45 (0) 98 631939
E-mail: info@jordahl-pfeifer.dk
www.jordahl-pfeifer.dk

HUNGARY
PFEIFER Garant Kft.
Gyömröi út 128
1103 Budapest, Hungary
Tel.: +36 (0) 1 2601014
Fax: +36 (0) 1 2620927
E-mail: info@pfeifer-garant.hu
www.pfeifer-garant.hu

UNITED KINGDOM
J&P Building Systems Ltd.
Unit 5
Thame Forty
Jane Morbey Road
Thame, Oxfordshire, OX9 3RR, UK
Tel.: +44 (0) 1844 215200
Fax: +44 (0) 1844 263257
enquiries@jandpbuildingsystems.com
www.jp-uk.com

UKRAINE
JORDAHL & PFEIFER
Technika Budowlana
ul. Pawlyka 17a
76-018 Ivano-Frankivsk, Ukraine
Tel. Reg. East: +380 (0) 67442 8578
Tel. Reg. West: +380 (0) 67442 8579
E-mail: info@j-p.com.ua

CZECH REPUBLIC
Jordahl & Pfeifer
Stavební technika s.r.o.
Bavorská 856/14
15500 Prague 5, Czech Republic
Tel.: +420 (0) 272 700701
Fax: +420 (0) 272 700704
E-mail: info@jpcz.cz
www.jpcz.cz

SPAIN
PFEIFER Cables y Equipos de Elevación, S.L.
Avda.de Los Pirineos, 25 – Nave 20
San Sebastian de los Reyes
28700 Madrid, Spain
Tel.: +34 (0) 91 659 3185
Fax: +34 (0) 91 659 3139
E-mail: p-es@pfeifer.de
www.pfeifer.es

SINGAPORE
J&P Building Systems Pte Ltd.
No. 48 Toh Guan Road East
#08-104 Enterprise Hub
SINGAPORE 608586
Tel.: +65 (0) 6569 6131
Fax: +65 (0) 6569 5286
E-mail: info@jnp.com.sg
www.jnp.com.sg

ROMANIA
S.C. JORDAHL & PFEIFER TEHNICÃ DE ANCORARE S.R.L
Str. Malului Nr. 7, et. 1
550197 Sibiu jud. Sibiu, Romania
Tel.: +40 (0) 269 246098
Fax: +40 (0) 269 246099
E-mail: info@jordahl-pfeifer.ro
www.jordahl-pfeifer.ro

POLAND
JORDAHL & PFEIFER TECHNIKA BUDOWLANA SP. Z O. O.
ul. Wrocławska 68
55-330 Krępice k/Wrocławia, Poland
Tel.: +48 (0) 71 3968264
Fax: +48 (0) 71 3968105
E-mail: biuro@jordahl-pfeifer.pl
www.j-p.pl

Disclaimer

1. This work and all parts thereof are protected by copyright law. Use of this work is not be permitted without the agreement of H-BAU Technik GmbH.
2. All texts and diagrams in this printed product have been developed and compiled with the utmost care and are designed to provide preliminary information. Nevertheless, errors cannot be completely excluded. The publisher shall assume no liability, irrespective of the legal grounds for this. Previous documents shall become invalid with the issue of this document.

www.h-bau.de

Forward Constructing.

02/2018

H-BAU TECHNIK GMBH
Am Güterbahnhof 20
79771 Klettgau, Germany
Tel.: +49 (0) 7742 9215-0
Fax: +49 (0) 7742 9215-129
E-mail: info@h-bau.de