Deutsches Institut für Bautechnik DIBt

Member of EOTA
www.eota.eu

Approval body for construction products and types of construction

Bautechnisches Prüfamt

An institution established by the Federal and Laender Governments

Designated according to Article 29 of Regulation (EU) No 305/2011 and member of EOTA (European Organisation for Technical Assessment)

European Technical Assessment

ETA-09/0338 of 18 June 2018

English translation prepared by DIBt - Original version in German language

General Part

Technical Assessment Body issuing the European Technical Assessment:	Deutsches Institut für Bautechnik
Trade name of the construction product	Jordahl-anchor channel JTA
Product family to which the construction product belongs	Cast-in anchor channels
Manufacturer	JORDAHL GmbH Nobelstraße 51 12057 Berlin DEUTSCHLAND
Manufacturing plant	14959 Trebbin, Industriestr. 5
This European Technical Assessment contains	27 pages including 3 annexes which form an integral part of this assessment
This European Technical Assessment is issued in accordance with Regulation (EU) No 305/2011, on the basis of	EAD 330008-02-0601

The European Technical Assessment is issued by the Technical Assessment Body in its official language. Translations of this European Technical Assessment in other languages shall fully correspond to the original issued document and shall be identified as such.

Communication of this European Technical Assessment, including transmission by electronic means, shall be in full. However, partial reproduction may only be made with the written consent of the issuing Technical Assessment Body. Any partial reproduction shall be identified as such.

This European Technical Assessment may be withdrawn by the issuing Technical Assessment Body, in particular pursuant to information by the Commission in accordance with Article 25(3) of Regulation (EU) No 305/2011.

Specific Part

1 Technical description of the product

The Jordahl-anchor channel JTA is system consisting of C-shaped channel profile steel and stainless steel and at least two metal anchors non-detachably fixed on the channel back and channel bolts.

The anchor channel is embedded surface-flush in the concrete. Jordahl-channel bolts (hammerhead or hooked) with appropriate hexagon nuts and washers are fixed to the channel.

The product description is given in Annex A.

2 Specification of the intended use in accordance with the applicable European Assessment Document

The performances given in Section 3 are only valid if the anchor channel is used in compliance with the specifications and conditions given in Annex B.

The verifications and assessment methods on which this European Technical Assessment is based lead to the assumption of a working life of the anchor channel of at least 50 years. The indications given on the working life cannot be interpreted as a guarantee given by the producer, but are to be regarded only as a means for choosing the right products in relation to the expected economically reasonable working life of the works.

3 Performance of the product and references to the methods used for its assessment

3.1 Mechanical resistance and stability (BWR 1)

Essential characteristic	Performance
Characteristic resistance to tension load (static and quasi-static loading)	See Annex C1 to C3 and C5
Characteristic resistance to shear load (static and quasi-static loading)	See Annex C4 to C5
Displacements (static and quasi-static loading)	See Annex C3 to C4
Characteristic resistance under fatigue cyclic loads (tension)	See Annex C8 to C9

3.2 Safety in case of fire (BWR 2)

Essential characteristic	Performance
Reaction to fire	Class A1
Resistance to fire	See Annex C6 to C7

4 Assessment and verification of constancy of performance (AVCP) system applied, with reference to its legal base

In accordance with EAD No. 330008-02-0601, the applicable European legal act is: [2000/273/EC].

The system to be applied is: 1

5 Technical details necessary for the implementation of the AVCP system, as provided for in the applicable EAD

Technical details necessary for the implementation of the AVCP system are laid down in the control plan deposited with Deutsches Institut für Bautechnik.

Issued in Berlin on 18 June 2018 by Deutsches Institut für Bautechnik

BD Dipl.-Ing. Andreas Kummerow
Head of Department

beglaubigt:
Tempel

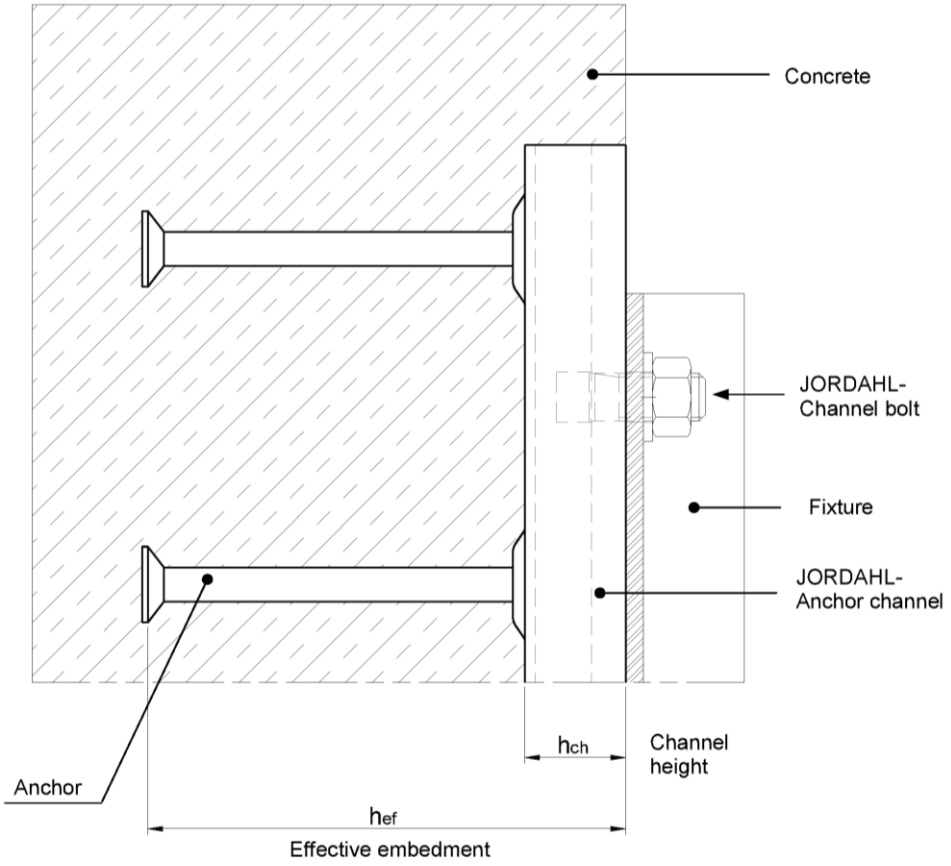

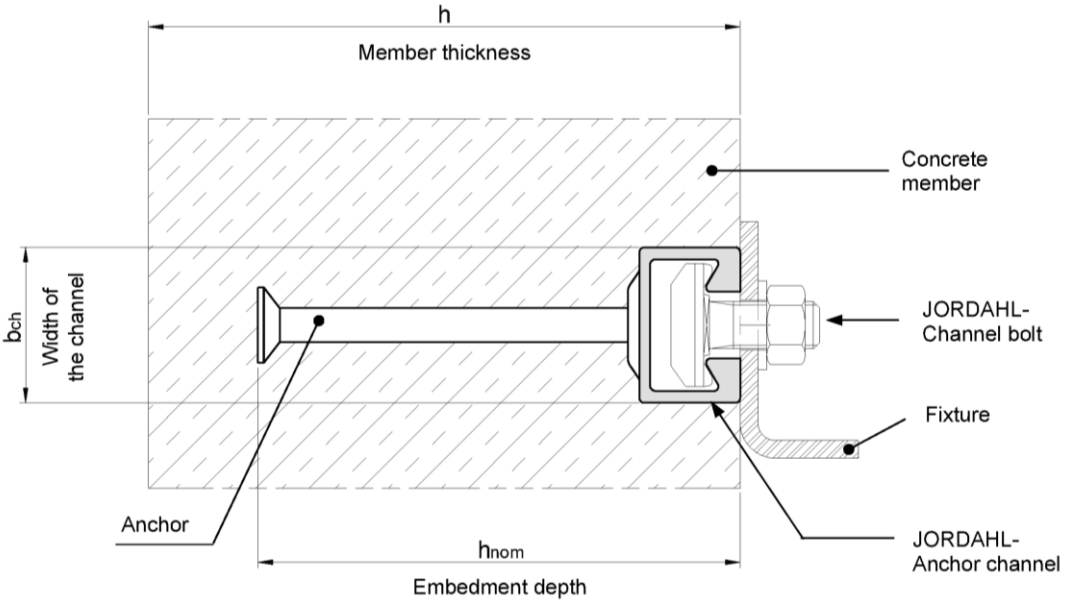

JORDAHL - Anchor Channel JTA	**Annex A1**
Product description Installed condition	

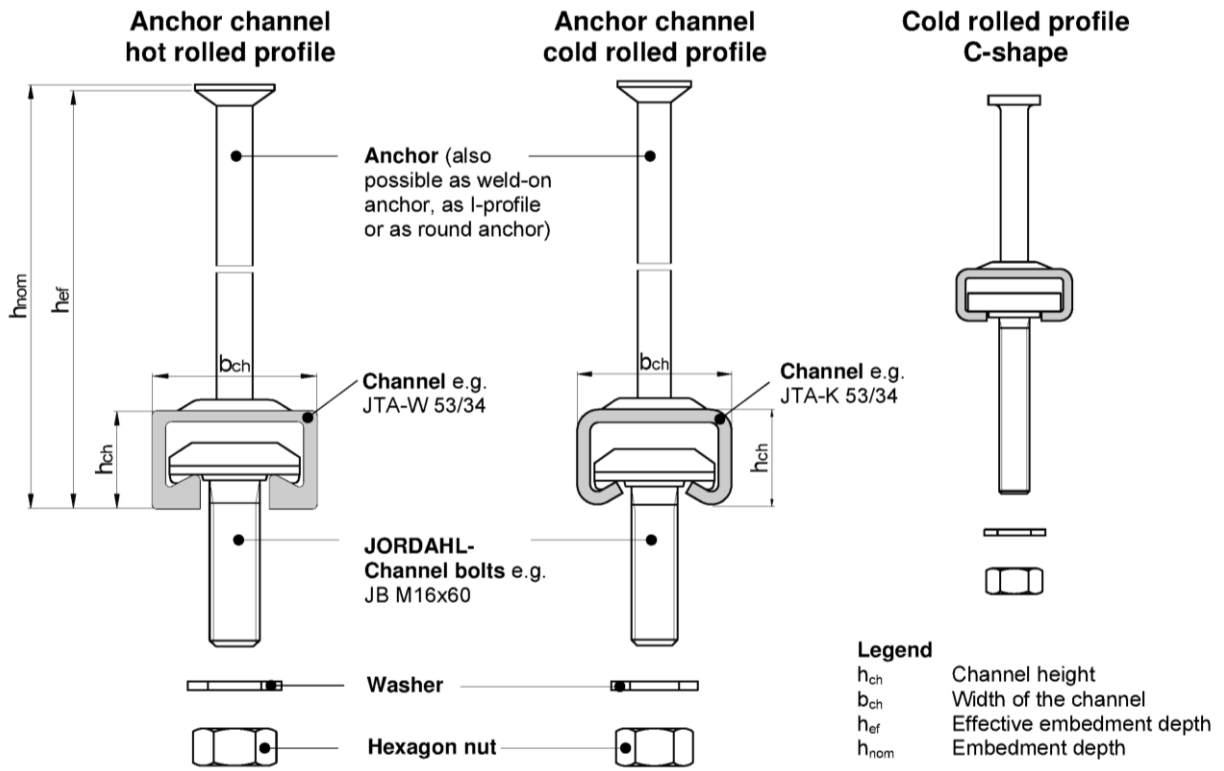

Legend

h_{ch}	Channel height
b_{ch}	Width of the channel
h_{ef}	Effective embedment depth
h_{nom}	Embedment depth

Marking of the JORDAHL - anchor channel: e.g. JORDAHL W 53/34 A4

J or JORDAHL	= Identifying mark of the manufacturer
W	= Manufacturing method
50/30	= Size
A4	= Material

Close to the anchors a nail hole is positioned

Material channels:

Steel
No marking for 1.0038 / 1.0044

Stainless steel

A2	= 1.4301 / 1.4307 / 1.4567 / 1.4541
A4	= 1.4401 / 1.4404 / 1.4571
L4	= 1.4062 / 1.4162 / 1.4362
F4, FA	= 1.4462
HCR	= 1.4529 / 1.4547

Marking of the JORDAHL – channel bolt: e.g. JB A4 – 70

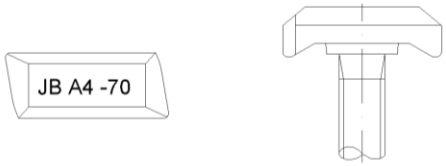

J or JORDAHL	= Identifying mark of the manufacturer
B	= Channel bolt type
A4	= Material
70	= Strength grade

Material bolts:

Steel
No marking

Stainless steel

A2	= 1.4301 / 1.4307 / 1.4567 / 1.4541
A4	= 1.4401 / 1.4404 / 1.4571 / 1.4578
L4	= 1.4362
F4, FA	= 1.4462
HCR	= 1.4529 / 1.4547

Strength grade bolts:

Steel
4.6, 8.8 — Strength grade 4.6, 8.8

Stainless steel
50, 70 — Strength grade 50, 70

JORDAHL - Anchor Channel JTA

Product description
Marking and materials

Annex A2

Table A1: Materials and intended use

1	2	3	4	5	6
Item no.	**Specification**	**Intended use**			
		Dry internal conditions	**Internal conditions with usual humidity**	**Medium corrosion exposure**	**High corrosion exposure**
		Anchor channels may only be used in structures subject to dry internal conditions (e.g. accommodations, bureaus , schools, hospitals, shops, exceptional internal conditions with usual humidity acc. to column 4)	Anchor channels may also be used in structures subject to internal conditions with usual humidity (e.g. kitchen, bath- and laundry in residential buildings, exceptional permanently damp conditions and application under water)	Anchor channels may also be used in structures subject to external atmospheric exposure (including industrial and marine environment) or exposure in permanently damp internal conditions if no particular aggressive conditions (e.g. permanent, alternating immersion in seawater etc. acc. to column 6) exist.	Anchor channels may also be used in structures subject to exposure in particular agressive conditions (e.g. permanent, alternating immersion in seawater or the splash zone of seawater, chloride atmosphere of indoor swimming pools or atmosphere with chemical pollution e.g. in desulphurization plants or road tunnels where deicing materials are used)
		Materials			
1	**Channel profile**	Steel 1.0038; 1.0044 EN 10025:2005 hot-dip galv. ≥ 55 µm [4]	Steel 1.0038; 1.0044 EN 10025:2005 hot-dip galv. ≥ 55 µm [4] Stainless steel 1.4301, 1.4307, 1.4567, 1.4541; EN 10088:2009 [6]	Stainless steel 1.4401; 1.4404; 1.4571; 1.4062, 1.4162,1.4362, 1.4462 EN 10088:2009	Stainless steel 1.4529; 1.4547 EN 10088:2005
2	**Anchor**	Steel 1.0038; 1.0214; 1.0401; 1.1132; 1.5525 EN 10263:2017, EN 10269:2013 hot-dip galv. ≥ 55 µm [4]	Steel 1.0038; 1.0214; 1.0401; 1.1132; 1.5525 EN 10263:2017, EN 10269:2013 hot-dip galv. ≥ 55 µm [4] Stainless steel 1.4301, 1.4307, 1.4567, 1.4541 EN 10088:2009 [6]	Stainless steel 1.4401; 1.4404; 1.4571; 1.4578; 1.4362; 1.4462 EN 10088:2009 Steel 1.0038 [1]	
3	**Jordahl - Channel bolt with shaft and thread acc. to EN ISO 4018**	Steel, strength grade 4.6/8.8 in dependence on EN ISO 898-1:2013 electroplated ≥ 5 µm [2] [5]	Steel, strength grade 4.6/8.8 in dependence on EN ISO 898-1:2013 hot-dip galv. ≥ 50 µm [3] [5] Stainless steel, strength grade 50, 70 1.4301, 1.4307, 1.4567, 1.4541 EN ISO 3506-1:2009 [6]	Stainless steel strength grade 50, 70 1.4401; 1.4404; 1.4571; 1.4362, 1.4578, 1.4462 EN ISO 3506-1:2009	Stainless steel strength grade 50, 70 1.4529; 1.4547 EN ISO 3506-1:2009
4	**Washer, EN ISO 7089 and EN ISO 7093-1 production class A, 200HV**	Steel EN 10025:2005 electroplated ≥ 5 µm [2]	Steel EN 10025:2005 hot-dip galv. ≥ 50 µm [3] Stainless steel, Steel grade A2, A3 EN ISO 3506-1:2009 [6]	Stainless steel Steel grade A4, A5, 1.4462 EN ISO 3506-1:2009	Stainless steel 1.4529; 1.4547 EN ISO 3506-1:2009
5	**Hexagonal nut EN ISO 4032**	Steel, strength grade 5/8 EN ISO 898-2:2012 electroplated ≥ 5 µm [2]	Steel, strength grade 5/8 EN 898-2:2012 hot-dip galv. ≥ 50 µm [3] Stainless steel, strength grade 70, 80 Steel grade A2, A3 EN ISO 3506-2:2009 [6]	Stainless steel strength grade 70, 80 Steel grade A4, A5, 1.4462 EN ISO 3506-2:2009	Stainless steel strength grade 70, 80 1.4529; 1.4547 EN ISO 3506-2:2009

[1] Steel acc. to EN 10025:2005, only for weld-on anchors, with sufficient concrete cover acc. to EN 1992-1-1:2004 + AC:2010
[2] Electroplated acc. to EN ISO 4042:1999
[3] Hot-dip galvanized acc. to EN ISO 10684:2004 + AC:2009
[4] Hot-dip galvanized on the basis of EN ISO 1461:2009, but coating thickness ≥ 55 µm
[5] Properties acc. to EN ISO 898-1:2013 only in threaded part of the channel bolt
[6] Stainless steel anchors only in combination with stainless steels profiles, channel bolts, washers and nuts

JORDAHL - Anchor Channel JTA

Product description
Materials and intended use

Annex A3

Hot rolled profile

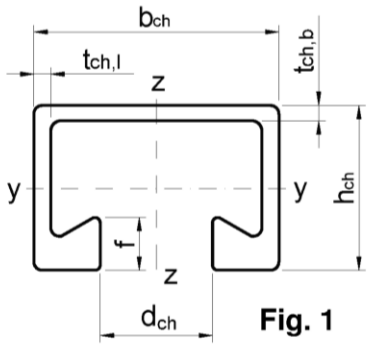

Fig. 1

Cold rolled profile

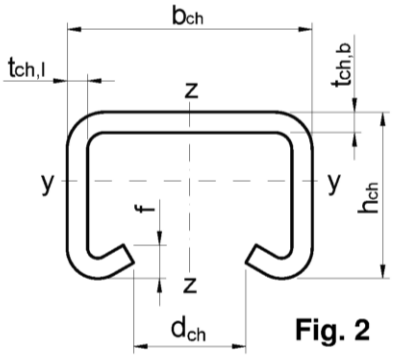

Fig. 2

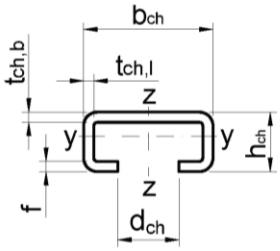

Fig. 3

Table A2: Dimensions of channel profile

Profile	Figure	Material	Dimensions						I_y
			b_{ch}	h_{ch}	$t_{ch,b}$	$t_{ch,l}$	d_{ch}	f	
			[mm]						[mm^4]
K 28/15	3	Steel	28.00	15.25	2.25	2.25	12.00	2.25	4060
K 38/17	3		38.00	17.50	3.00	3.00	18.00	3.00	8547
K 40/25	2		40.00	25.00	2.75	2.75	18.00	5.60	20570
K 50/30	2		50.00	30.00	3.00	3.00	22.00	7.39	41827
K 53/34	2		53.50	33.00	4.50	4.50	22.00	7.90	72079
K 72/48	2		72.00	49.00	6.00	6.00	33.00	9.90	293579
W 40/22	1		39.50	23.00	2.60	2.40	18.00	6.00	20029
W 40+	1		39.50	23.00	2.60	2.40	18.00	6.00	20029
W 50/30	1		49.00	30.00	3.20	2.75	22.50	7.85	52896
W 50+	1		49.00	30.00	3.20	2.75	22.50	7.85	52896
W 53/34	1		52.50	33.50	4.10	4.00	22.50	10.50	93262
W 55/42	1		54.50	42.00	5.00	5.00	26.00	12.90	187464
W 72/48	1		72.00	48.50	4.50	5.00	33.00	15.50	349721
K 28/15	3	Stainless steel	28.00	15.25	2.25	2.25	12.00	2.25	4060
K 38/17	3		38.00	17.50	3.00	3.00	18.00	3.00	8547
K 40/25	2		39.50	25.00	2.50	2.50	18.00	5.40	19097
K 50/30	2		50.00	30.00	3.00	3.00	22.00	7.39	41827
K 53/34	2		53.50	33.00	4.50	4.50	22.00	7.90	72079
K 72/48	2		72.00	49.00	6.00	6.00	33.00	9.90	293579
W 40/22	1		39.50	23.00	2.60	2.40	18.00	6.00	20029
W 40+	1		39.50	23.00	2.60	2.40	18.00	6.00	20029
W 50/30	1		49.00	30.00	3.20	2.75	22.50	7.85	52896
W 50+	1		49.00	30.00	3.20	2.75	22.50	7.85	52896
W 53/34	1		52.50	33.50	4.10	4.00	22.50	10.50	93262
W72/48	1		72.00	48.50	4.50	5.00	33.00	15.50	349721

JORDAHL - Anchor Channel JTA

Product description
Profile dimensions

Annex A4

Round anchor **I – Anchor**

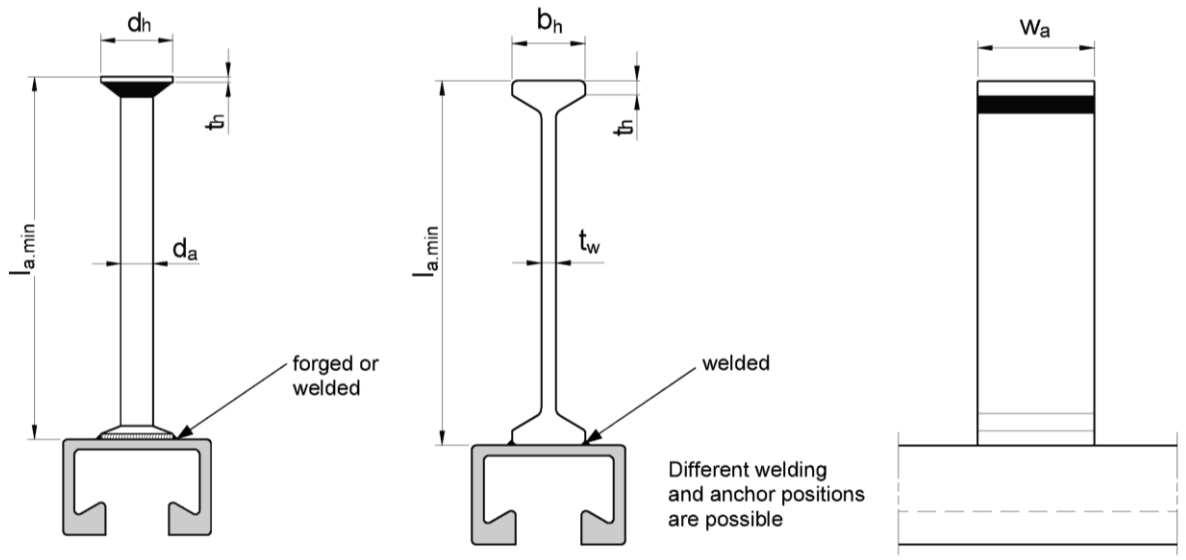

Table A3: Types of round anchors

Type	Shaft Ø d_a	Head Ø d_h	Head thickness t_h	Min. length $l_{a,min}$	Anchor channel
	[mm]				
R	7.0	12.0	2.0	31.8	K 28/15
	8.5	15.0	2.0	56.0	K 40/25 W 40/22
				70.0	W 40+
	9.0	17.0	3.0	61.5	K 38/17
				57.0	K 40/25 W 40/22
	9.0	17.5	3.0	67.0	K 50/30 W 50/30
	10.0	19.5	3.0	79.0	W 50+
	10.8	19.0	3.0	71.0	W 40+
				67.0	K 50/30 W 50/30
	11.5	23.5	3.0	124.5	K 53/34 W 53/34
	15.5	28.0	3.5	136.5	W 55/42
	15.5	31.0	3.5	133,5	K 72/48 W 72/48

Table A4: Types of I-anchors

Type	Length l_a	Head width b_h	Web thickness t_w	Head thickness t_h	Width w_a	Anchor channel
	[mm]					
I 60	62	18	5	3.3	10.0	K 28/15
					10.0	K 38/17
					12.0	K 40/25
					12.0	W 40/22
I 69	69	18	5	3.5	18.0	K 50/30
					18.0	W 50/30
I 128	128	17	6	5.0	20.0	W 40+
					25.0	W 50+
					26.0	K 53/34
					26.0	W 53/34
I 140	140	20	7.1	6.0	20.0	W 40+
					25.0	W 50+
					32.0	W 55/42
					40.0	K 72/48
					40.0	W 72/48

JORDAHL - Anchor Channel JTA

Product description
Type of anchors

Annex A5

Fig. 1
Round anchor

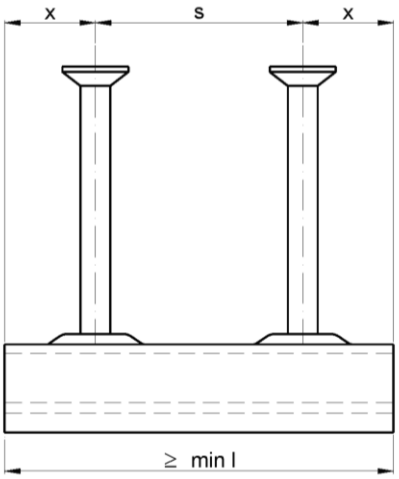

Fig. 2
Welded anchor
(I-anchor)

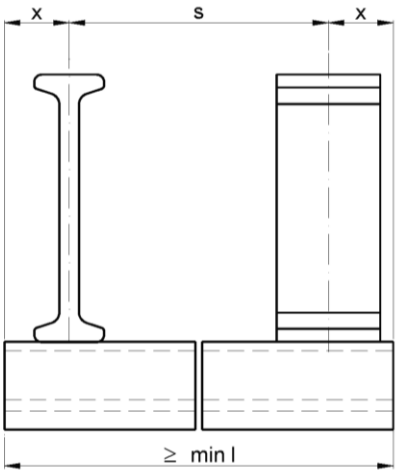

Fig. 3
Round welded
anchor

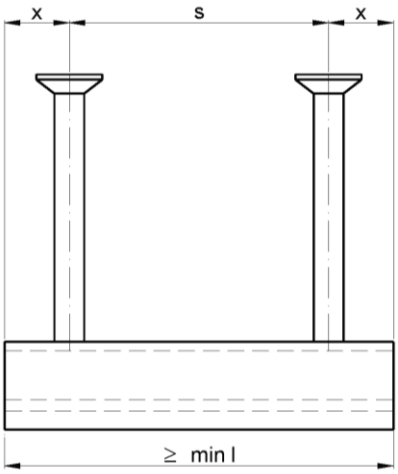

Table A5: Anchor positioning

	Anchor spacing		**End spacing x** [1]		**Min. channel length (min l)**	
Anchor channel	s_{min}	s_{max}	**Round anchor** Fig. 1	**Welded anchor** Fig. 2, Fig. 3	**Round anchor** Fig. 1	**Welded anchor** Fig. 2, Fig. 3
	[mm]		[mm]		[mm]	
K 28/15 **K 38/17**	50	200	25	25	100	
K 40/25 **W 40/22** **W 40+** **K 50/30** **W 50/30** **W 50+**	50	250	25	25	100	
K 53/34 **W 53/34**	100 (80)	250	35	25 (35)	150	
W 55/42	100 (80)	300	35	25 (35)	150	
K 72/48 **W 72/48**	100 (80)	400	35	25 (35)	150	

() Values for round anchors acc. to Fig. 1 and welded anchors with 35 mm end spacing
[1] The end spacing may be increased from 25 mm to 35 mm

JORDAHL - Anchor Channel JTA

Product description
Anchor positioning and channel length

Annex A6

Table A6: Dimensions of the JORDAHL - channel bolts

Anchor channel	Fig.	Channel bolt type	Channel bolt dimensions			
			b_1	b_2	k	ø
			[mm]			
K 28/15	1	JD	11.2	22.4	4.5	6
					4.5	8
					5.0	10
		JD/JUD	11.2	22.4	6.5	12
K 38/17	1	JH	16.5	30.5	6.0	10
					7.0	12
		JH/JUH	16.5	30.5	8.0	16
K 40/25 W 40/22 W 40+	2	JC	14.0	32.0	8.0	10
					8.0	12
			17.0	32.0	8.0	16
W 40/22 W 40+	3	JKC	16.8	32.7	8.0	16
K 50/30 W 50/30 W 50+ K 53/34 W 53/34	2	JB	17.0	41.5	9.0	10
					10.0	12
					11.0	16
			20.5	41.5	12.0	20
W 50/30 W 50+ W 53/34	3	JKB	17.0	41.5	12.0	16
			20.5	41.5	13.5	20
W 55/42	2	JB	17.0	41.5	9.0	10
					10.0	12
					11.0	16
			20.5	41.5	12.0	20
		JB / JE	24.5	41.5	16.0	24
K 72/48 W 72/48	2	JA	25.0	58.0	14.0	20
			25.0		20.0	24
			28.0		20.0	27
			31.0		20.0	30

Table A7: Strength grades

Channel bolt		Steel [1]		Stainless steel [1]	
Strength grade		4.6	8.8	50	70
f_{uk}	[N/mm²]	400	800	500	700
f_{yk}		240	640	210	450
Finish		z.p., h.d.g.		—	

[1] Materials according to Annex A3, Table A1

Fig. 1 - Hammer-head channel bolt

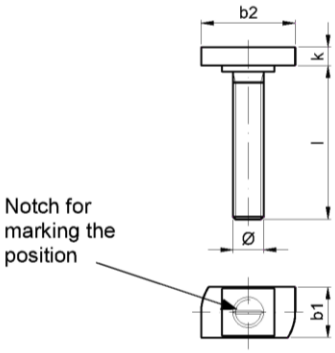

Fig. 2 - Hook-head channel bolt

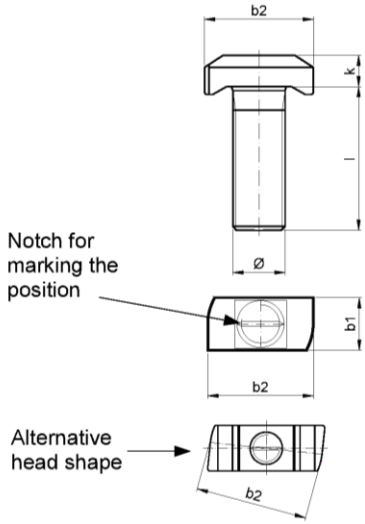

Fig. 3 - Double-notch toothed channel bolt

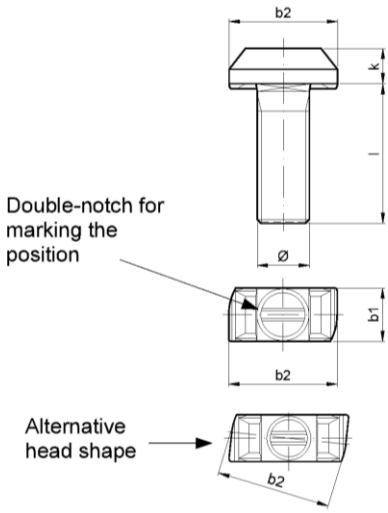

Marking of the channel bolt acc. to Annex A2

JORDAHL - Anchor Channel JTA

Product description
JORDAHL - Channel bolts - Dimensions and strength grades

Annex A7

Specifications of intended use

Anchor channels and channel bolts subject to:

- Static and quasi-static loads in tension and shear perpendicular to the longitudinal axis of the channel.
- Fatigue cyclic loads.
- Fire exposure for concrete class C20/25 to C50/60.

Base materials:

- Reinforced or unreinforced normal weight concrete according to EN 206-1:2000.
- Strength classes C12/15 to C90/105 according to EN 206-1:2000.
- Cracked or uncracked concrete.

Use conditions (Environmental conditions):

- Structures subject to dry internal conditions (e.g. accommodations, bureaus, schools, hospitals, shops, exceptional internal conditions with usual humidity)
  (anchor channels and channel bolts according to Annex A3, Table A1, column 3 - 6).
- Structures subject to internal conditions with usual humidity (e.g. kitchen, bath, and laundry in residential buildings, exceptional permanent damp conditions and application under water)
  (anchor channels and channel bolts according to Annex A3, Table A1, column 4 - 6)
- Structures subject to external atmospheric exposure (incl. industrial and marine environment) or exposure to permanently damp internal conditions, if no particular aggressive conditions (e.g. permanent, alternating immersion in seawater etc.) exist.
  (anchor channels and channel bolts according to Annex A3, Table A1, column 5 – 6)
- Structures subject to exposure in particular aggressive conditions (e.g. permanent, alternating immersion in seawater or the splash zone of seawater, chloride atmosphere of indoor swimming pools or atmosphere with chemical pollution (e.g. in desulphurization plants or road tunnels where de-icing materials are used))
  (anchor channels and channel bolts according to Annex A3, Table A1, column 6)

Design:

- Anchor channels are designed under the responsibility on an engineer experienced in anchorages and concrete work.
- Verifiable calculation notes and drawings are prepared taking account of the loads to be anchored. The position of the anchor channel and T-bolts are indicated on the design drawings (e.g. position of the anchor channel relative to the reinforcement or to supports).
- For static and quasi-static loading as well as fire exposure the anchor channels are designed in accordance with EOTA TR 047 “Design of Anchor Channels”, March 2018 or FprEN 1992-4:2016.
- For fatigue loading the anchor channels are designed in accordance with EOTA TR 050 “Calculation Method for the Performance of Anchor Channels under Fatigue Loading”, November 2015.
- The characteristic resistances are calculated with the minimum effective embedment depth.

JORDAHL - Anchor Channel JTA	**Annex B1**
Intended use Specifications	

Installation:

- The installation of anchor channels is carried out by appropriately qualified personnel under the supervision of the person responsible for the technical matters on site.
- Use of the anchor channels only as supplied by the manufacturer – without any manipulations, repositioning or exchanging of channel components.
- Cutting of anchor channels is allowed only if pieces according to Annex A6, Table A5 are generated including end spacing and minimum channel length and only to be used in dry internal conditions (Annex A3, Table A1, column 3). For anchor channels made of stainless steel there are no restrictions regarding corrosion resistance when using cut channel pieces, if cutting is done professionally and contamination of cutting edges with corroding material is avoided.
- Installation in accordance with the installation instructions given in Annexes B6 and B7
- The anchor channels are fixed on the formwork, reinforcement or auxiliary construction such that no movement of the channels will occur during the time of laying the reinforcement and of placing and compacting the concrete.
- The concrete under the head of the anchors is properly compacted. The anchor profiles are protected from penetration of concrete into the internal space of the channel.
- Washer may be chosen according to Annex A3 and provided separately by the user.
- Orientating the channel bolt (groove according to Annex B7) rectangular to the channel axis.
- The required installation torques given in Annex B4 must be applied and must not be exceeded.

JORDAHL - Anchor Channel JTA	**Annex B2**
Intended use Specifications	

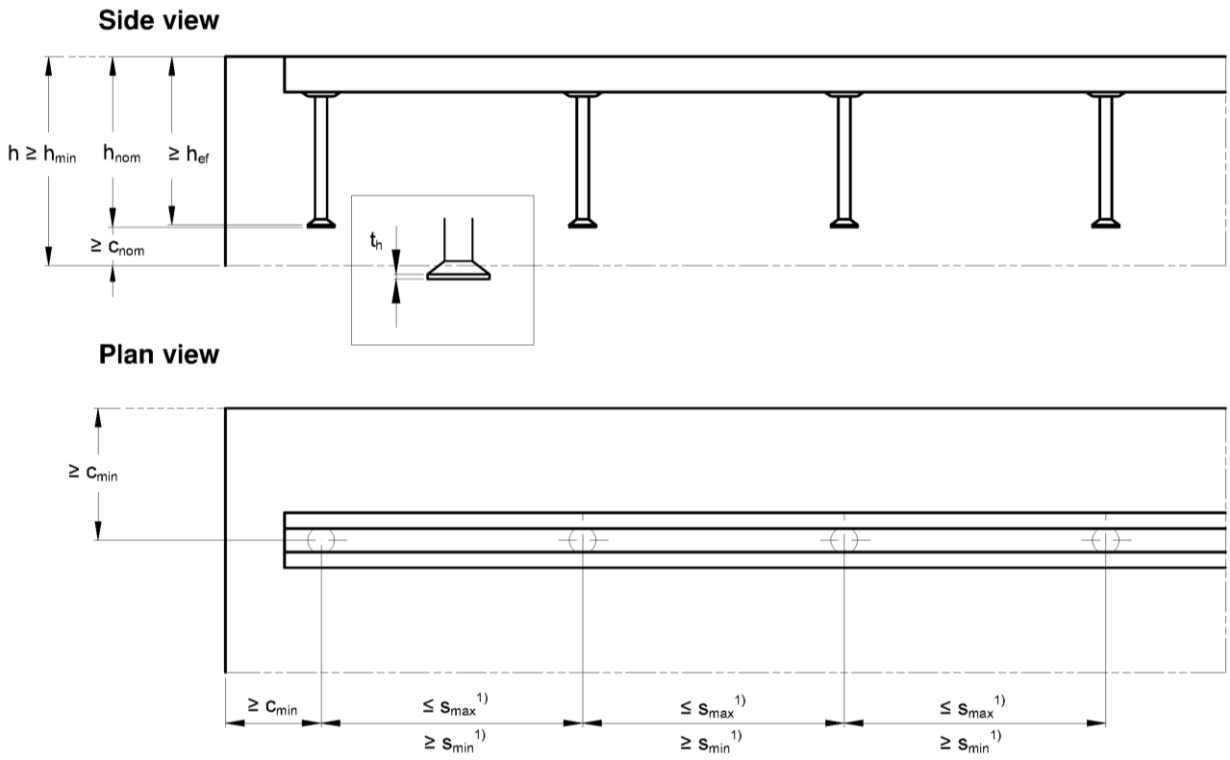

Table B1: Minimum effective embedment depth, edge distance and member thickness

Anchor channel			K 28/15	K 38/17	K 40/25 W 40/22	W 40+	K 50/30 W 50/30	W 50+	K 53/34 W 53/34	W 55/42	K 72/48 W 72/48
Min. effective embedment depth	$h_{ef,min}$	[mm]	45	76	79	91	94	106	155	175	179
Min. edge distance	c_{min}		40	50	50	50	75	75	100	100	150
Min. embedment depth	$h_{nom,min}$		47.0	79.0	81.0	93.0	97.0	109.0	158.0	178.5	182.5
Min. member thickness	h_{min}		55	87	90	102	105	118	170	191	195
			actual $h_{nom} + c_{nom}$ 2)								

1) s_{min}, s_{max} acc. to Annex A6, Table A5
2) c_{nom} acc. to EN 1992-1-1:2004 + AC:2010

JORDAHL - Anchor Channel JTA

Intended use
Installation parameters of anchor channels

Annex B3

Table B2: Minimum spacing and installation torque of JORDAHL – channel bolts

Anchor channel	JORDAHL-Channel bolt Ø	Min. spacing of the channel bolt $s_{min,cbo}$	Installation torque T_{inst} [4]		
			General [2]	Steel-steel contact [3]	
			Steel 4.6; 8.8 [1] Stainless steel 50; 70 [1]	Steel 4.6 [1] Stainless steel 50 [1]	Steel 8.8 [1] Stainless steel 70 [1]
	[mm]	[mm]	[Nm]		
K 28/15	6	30	3	3	8
	8	40	8	8	20
	10	50	13	15	40
	12	60	15	25	70
K 38/17	10	50	15	15	40
	12	60	25	25	70
	16	80	40	65	180
K 40/25 W 40/22 W 40+	10	50	15	15	40
	12	60	25	25	70
	16	80	45	65	180
K 50/30 W 50/30 W 50+	10	50	15	15	40
	12	60	25	25	70
	16	80	60	65	180
	20	100	75	130	360
K 53/34 W 53/34	10	50	15	15	40
	12	60	25	25	70
	16	80	60	65	180
	20	100	120	130	360
W 55/42	10	50	15	15	40
	12	60	25	25	70
	16	80	60	65	180
	20	100	120	130	360
	24	120	200	230	620
K 72/48 W 72/48	20	100	120	130	360
	24	120	200	230	620
	27	135	300	340	900
	30	150	380	460	1200

[1] Materials according to Annex A2 and Annex A3, Table A1
[2] Acc. to Annex B5, Fig. 1
[3] Acc. to Annex B5, Fig. 2
[4] T_{inst} must not be exceeded

JORDAHL - Anchor Channel JTA

Intended use
Installation parameters of JORDAHL - channel bolts

Annex B4

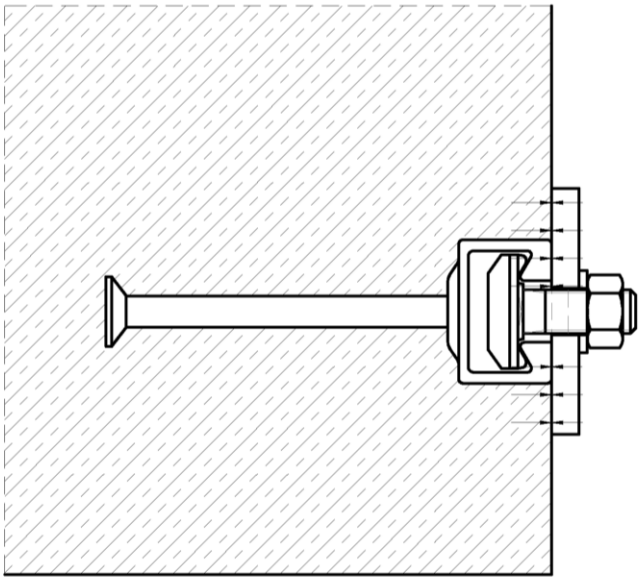

Fig. 1

General:

The fixture is in contact with the channel profile and the concrete surface.
The installation torques acc. to Annex B4, Table B2 shall be applied and must not be exceeded.

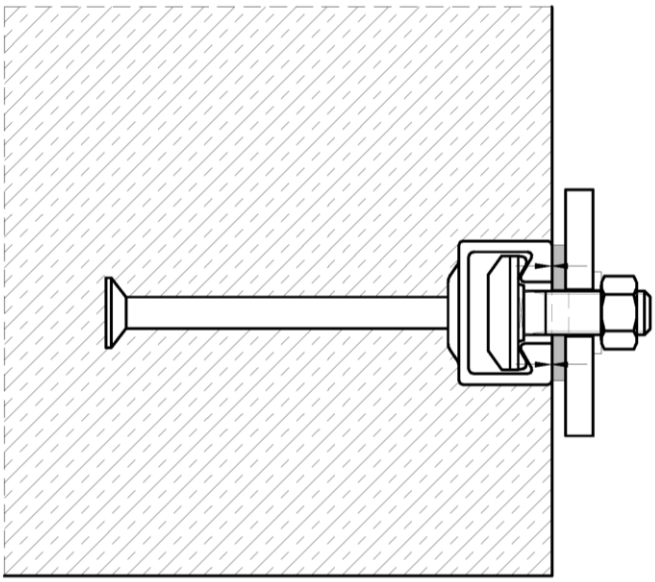

Fig. 2

Steel-steel contact:

The fixture is fastened to the anchor channel by suitable steel part (e.g. washer).
The installation torques acc. to Annex B4, Table B2 shall be applied and must not be exceeded.

JORDAHL - Anchor Channel JTA	**Annex B5**
Intended use Position of the fixture	

1. Fixing anchor channel

Install the channel surface flush and fix the channel undisplaceable to the formwork or to the reinforcement.

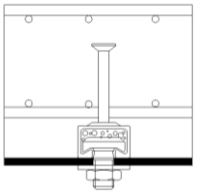

a) Fixing to steel formwork
With JORDAHL- Channel bolts and nuts, with rivets, cramps or with magneting fixings.

or

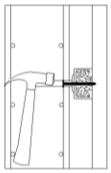

b) Fixing to timber formwork
With nails through the pre punched holes in the back of the channels and with staples.

or

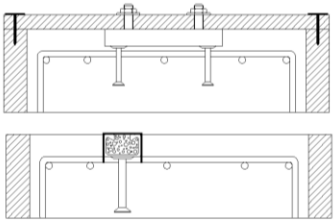

c) Fixing to anchor channels at the top
- To timber batten on the side formwork (e.g. with JORDAHL- Channel bolts).
- Fixing from above directly to the reinforcement or to a mounting rebar, attach the channel by wire binding.

2. Pouring concrete and regular compacting of concrete

Compact the concrete properly around the channel and the anchors.

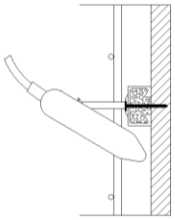

a) Sidefaces to the formwork

or

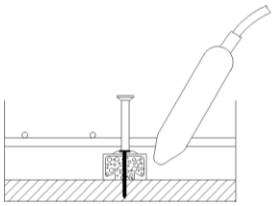

b) In soffits

or

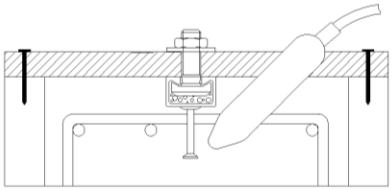

c) Into top surfaces of concrete up stands

3. Removing of the channel infill

Clean the channel on the outside after removing the formwork

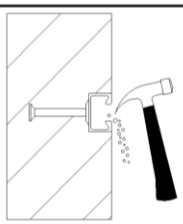

a) Foam infill
With a hammer or a hook.

or

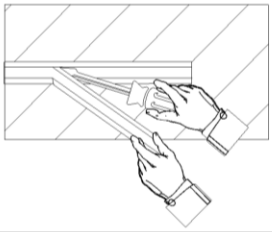

b) PE - foam infill
By hand or with help of a screw driver in one piece.

JORDAHL - Anchor Channel JTA	**Annex B6**
Intended use Installation instruction – JORDAHL - Anchor channel	

4. Fastening the JORDAHL- channel bolt to the anchor channel

Fig. 1

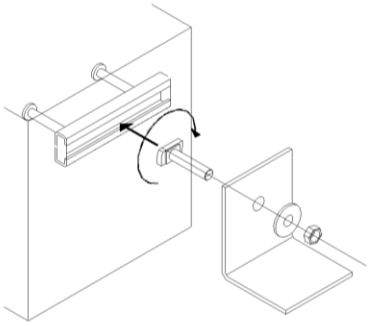

Fig. 2

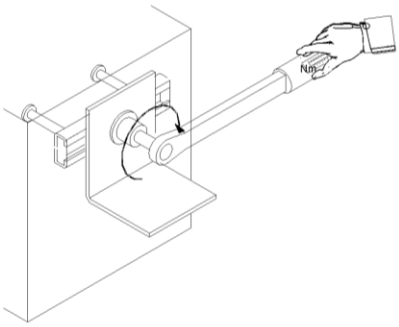

a) Installation torques (General)

1. Insert the JORDAHL- Channel bolt into the channel slot at any point along the channel length (Fig. 1).
2. Turn the channel bolt 90° clockwise and the head of the channel bolt locks into position (Fig. 1).
3. Do not mount the channel bolt at the end of the channel within the end spacing acc. to Annex A6.
4. Use the washer under the nut (Fig. 1).
5. Check the correct fit of the JORDAHL- Channel bolt. The groove on the shank end of the channel bolt must be perpendicular to the channel longitudinal axis.
6. Tighten the nuts to the installation torque according to Table 1 (Fig. 2). The installation torque must not be exceeded.

Table 1 – Installation torques (General)

Strength grade	Anchor channel	T_{inst} [Nm]								
		M6	M8	M10	M12	M16	M20	M24	M27	M30
Steel 4.6 / 8.8; Stainless steel 50 / 70	K 28/15	3	8	13	15	-	-	-	-	-
	K 38/17	-	-	15	25	40	-	-	-	-
	K 40/25 W 40/22 W 40+	-	-	15	25	45	-	-	-	-
	K 50/30 W 50/30 W 50+	-	-	15	25	60	75	-	-	-
	K 53/34 W 53/34	-	-	15	25	60	120	-	-	-
	W 55/42	-	-	15	25	60	120	200	-	-
	K 72/48 W 72/48	-	-	-	-	-	120	200	300	380

or

Fig. 3

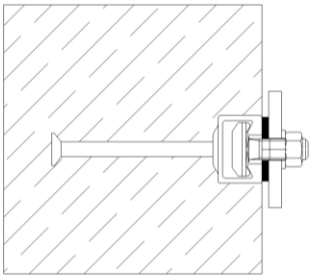

b) Installation torques (Steel-steel contact)

1. Use washers between the channel and the fixture to create a defined contact.
2. Tighten the nuts to the installation torque according to Table 2. The installation torque must not be exceeded.

Table 2 – Installation torques (Steel-steel contact)

Strength Grade	T_{inst} [Nm]								
	M6	M8	M10	M12	M16	M20	M24	M27	M30
Steel 4.6; Stainless steel 50	3	8	15	25	65	130	230	340	460
Steel 8.8; Stainless steel 70	8	20	40	70	180	360	620	900	1200

JORDAHL - Anchor Channel JTA

Intended use
Installation instruction – JORDAHL - Channel bolt

Annex B7

Table C1: Characteristic resistances under tension load – Steel failure of channel

Anchor channel			**K 28/15**	**K 38/17**	**K 40/25**	**W 40+**	**K 50/30**	**W 50+**	**K53/34**	**W 55/42**	**K 72/48**
					W 40/22		**W 50/30**		**W 53/34**		**W 72/48**
Steel failure: Anchor											
Characteristic resistance	$N_{Rk,s,a}$	[kN]	13	18	20	30	32	39	56	82	102
Partial safety factor	γ_{Ms} [1)]		1.8								
Steel failure: Connection channel / anchor											
Characteristic resistance	$N_{Rk,s,c}$	[kN]	9	18	20	29	31	39	55	80	100
Partial safety factor	$\gamma_{Ms,ca}$ [1)]		1.8								
Steel failure: Local flexure of channel lips											
Spacing of channel bolts for $N_{Rk,s,l}$	$s_{l,N}$	[mm]	56	76	80	79	100	98	107	109	144
					79		98		105		
Characteristic resistance	$N^0_{Rk,s,l}$	[kN]	9	18	20	38	31	43	55	110	100
					38		43		72		120
Partial safety factor	$\gamma_{Ms,l}$ [1)]		1.8								

[1)] In absence of other national regulations

Table C2: Flexural resistance of channel

Anchor channel			**K 28/15**	**K 38/17**	**K 40/25**	**W 40+**	**K 50/30**	**W 50+**	**K53/34**	**W 55/42**	**K 72/48**
					W 40/22		**W 50/30**		**W 53/34**		**W 72/48**
Steel failure: Flexure of channel											
Characteristic flexural resistance of channel	$M_{Rk,s,flex}$ [Nm]	Steel	317	580	1099	1406	1673	2830	2984	6447	8617
					1406		2830		3373		8593
		Stainless steel	324	593	1071	1580	1708	3184	2984	-	8617
					1580		3184		3445		8775
Partial safety factor	$\gamma_{Ms,flex}$ [1)]		1.15								

[1)] In absence of other national regulations

JORDAHL - Anchor Channel JTA

Performance
Characteristic resistances under tension load – Steel failure channel

Annex C1

Table C3: Characteristic resistances under tension load – Steel failure of JORDAHL - channel bolts

Channel bolt Ø				**M6**	**M8**	**M10**	**M12**	**M16**	**M20**	**M24**	**M27**	**M30**
Steel failure												
Characteristic resistance	$N_{Rk,s}$ [2]	[kN]	4.6 [1]	8.0	14.6	23.2	33.7	62.8	98.0	141.2	183.6	224.4
			8.8 [1]	16.1	29.3	46.4	67.4	125.6	196.0	282.4	367.2	448.8
			50 [1]	10.1	18.3	29.0	42.2	78.5	122.5	176.5	229.5	280.5
			70 [1]	14.1	25.6	40.6	59.0	109.9	171.5	247.1	321.3	392.7
Partial safety factor	γ_{Ms} [3]		4.6 [1]	2.00								
			8.8 [1]	1.50								
			50 [1]	2.86								
			70 [1]	1.87								

[1] Materials according to Annex A2 and Annex A3, Table A1
[2] In conformity to EN ISO 898-1:2013
[3] In absence of other national regulations

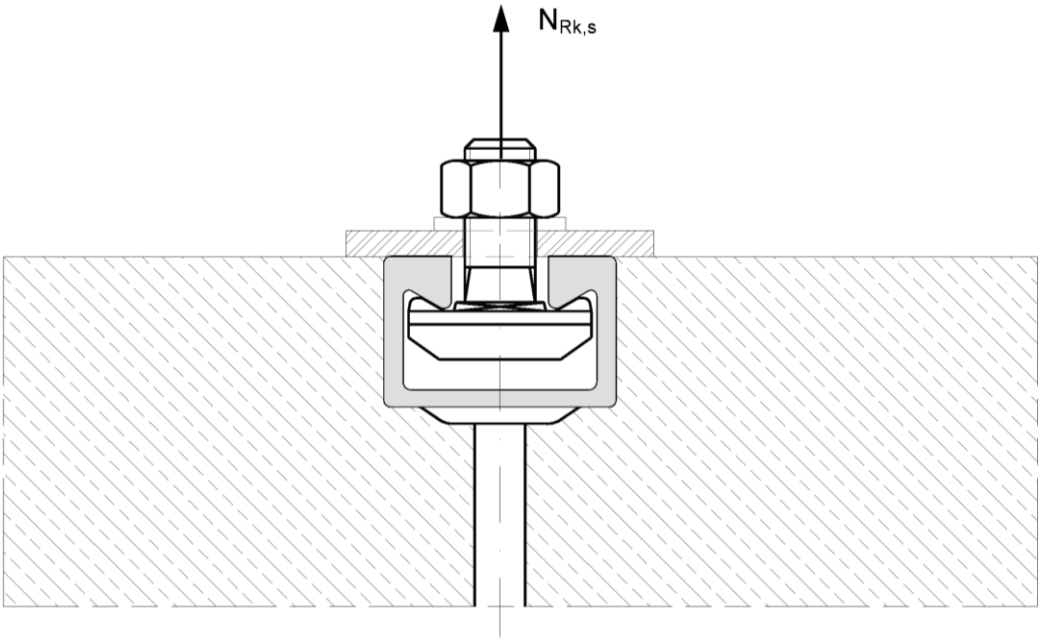

JORDAHL - Anchor Channel JTA

Performance
Characteristic resistances under tension load – JORDAHL-Channel bolts

Annex C2

Table C4: Characteristic resistances under tension load – Concrete failure

Anchor channel				K 28/15	K 38/17	K 40/25 W 40/22	W 40+	K 50/30 W 50/30	W 50+	K 53/34 W 53/34	W 55/42	K 72/48 W 72/48
Pullout failure												
Characteristic resistance in cracked concrete C12/15	Round anchors	$N_{Rk,p}$	[kN]	6.7	14.7	10.8	10.8 (17.3)[1]	15.9	19.8	29.7	38.4	50.9
	I-anchors			11.7	11.7	14.0	19.8	21.1	24.8	25.7	37.2	46.4
Characteristic resistance in uncracked concrete C12/15	Round anchors	$N_{Rk,p}$	[kN]	9.4	20.6	15.1	15.1 (24.2)[1]	22.3	27.7	41.6	53.8	71.3
	I-anchors			16.4	16.4	19.7	27.7	29.5	34.7	36.0	52.1	65.0
Increasing factor of $N_{Rk,p}$	C20/25	ψ_c	[–]	1.67								
	C25/30			2.08								
	C30/37			2.50								
	C35/45			2.92								
	C40/50			3.33								
	C45/55			3.75								
	C50/60			4.17								
	C55/67			4.58								
	≥ C60/75			5.00								
Partial safety factor		γ_{Mp} [2]		1.5								
Concrete cone failure												
Product factor k_1		$k_{cr,N}$		7.2	7.8	7.9	8.0	8.1	8.2	8.7	8.9	8.9
		$k_{ucr,N}$		10.3	11.2	11.2	11.5	11.5	11.7	12.4	12.6	12.7
Partial safety factor		γ_{Mc} [2]		1.5								
Splitting												
Characteristic edge distance		$c_{cr,sp}$	[mm]	135	228	237	273	282	318	465	525	537
Characteristic spacing		$s_{cr,sp}$		270	456	474	546	564	636	930	1050	1074
Partial safety factor		γ_{Msp} [2]		1.5								

[1] Values in brackets for steel anchors
[2] In absence of other national regulations

Table C5: Displacements under tension load

Anchor channel			K 28/15	K 38/17	K 40/25 W 40/22	W 40+	K 50/30 W 50/30	W 50+	K 53/34 W 53/34	W 55/42	K 72/48 W 72/48
Tension load	N	[kN]	3.6	7.1	7.9	11.5	12.3	15.5	21.8	31.7	39.7
Short time displacement	δ_{N0}	[mm]	0.3	0.3	0.4	0.4	0.4	0.5	0.5	0.5	0.5
Long time displacement	$\delta_{N\infty}$	[mm]	0.6	0.6	0.8	0.8	0.8	1.0	1.0	1.0	1.0

JORDAHL - Anchor Channel JTA

Performance
Characteristic resistances under tension load – Concrete failure and displacements

Annex C3

Table C6: Characteristic resistances under shear load – Steel failure of anchor channel

Anchor channel			K 28/15	K 38/17	K 40/25	W 40+	K 50/30	W 50+	K 53/34	W 55/42	K 72/48
					W 40/22		W 50/30		W 53/34		W 72/48
Steel failure: Failure of anchor											
Characteristic resistance	$V_{Rk,s,a}$	[kN]	13	18	20	35	32	59	56	110	102
					35		52		78		146
Partial safety factor	γ_{Ms} [1)]		1.5								
Steel failure: Failure of connection between anchor and channel											
Characteristic resistance	$V_{Rk,s,c}$	[kN]	9	18	20	35	31	59	55	110	100
					35		52		78		146
Partial safety factor	$\gamma_{Ms,ca}$ [1)]		1.8								
Steel failure: Local failure by flexure of channel lips											
Characteristic spacing of channel bolts for $V_{Rk,s,l}$	$s_{l,V}$	[mm]	56	76	80	79	100	98	107	109	144
					79		98		105		
Characteristic resistance	$V^0_{Rk,s,l}$	[kN]	9	18	20	35	31	59	55	110	100
					35		52		78		146
Partial safety factor	$\gamma_{Ms,l}$ [1)]		1.8								

Table C7: Characteristic resistances under shear load – Concrete failure

Anchor channel			K 28/15	K 38/17	K 40/25 W 40/22	W 40+	K 50/30 W 50/30	W 50+	K 53/34 W 53/34	W 55/42	K 72/48 W 72/48
Pry out failure											
Product factor		k_8	1.0	2.0							
Partial safety factor		γ_{Mc} [1)]	1.5								
Concrete edge failure											
Product factor k_{12}	cracked concrete	$k_{cr,V}$	4.5	7.5							
	uncracked concrete	$k_{ucr,V}$	6.3	10.5							
Partial safety factor		γ_{Mc} [1)]	1.5								

[1)] In absence of other national regulations

Table C8: Displacements under shear load

Anchor channel			K 28/15	K 38/17	K 40/25	W 40+	K 50/30	W 50+	K 53/34	W 55/42	K 72/48
					W 40/22		W 50/30		W 53/34		W 72/48
Shear load	V	[kN]	3.6	7.1	7.9	13.9	12.3	23.4	21.8	43.7	39.7
					13.9		20.6		31.0		57.9
Short time displacement	δ_{V0}	[mm]	0.6	0.6	0.6	0.6	0.6	0.6	1.2	1.2	1.2
Long time displacement	$\delta_{V\infty}$	[mm]	0.9	0.9	0.9	0.9	0.9	0.9	1.8	1.8	1.8

Table C9: Characteristic resistances under shear loads – Steel failure of JORDAHL - channel bolts

Channel bolt Ø				**M6**	**M8**	**M10**	**M12**	**M16**	**M20**	**M24**	**M27**	**M30**
Steel failure												
Characteristic resistance	$V_{Rk,s}$ [2]	[kN]	4.6 [1]	4.8	8.8	13.9	20.2	37.7	58.8	84.7	110.2	134.6
			8.8 [1]	8.0	14.6	23.2	33.7	62.8	98.0	141.2	183.6	224.4
			50 [1]	6.0	11.0	17.4	25.3	47.1	73.5	105.9	137.7	168.3
			70 [1]	8.4	15.4	24.4	35.4	65.9	102.9	148.3	192.8	235.6
Characteristic flexural resistance	$M^0_{Rk,s}$	[Nm]	4.6 [1]	6.3	15.0	29.9	52.4	133.2	259.6	449.0	665.8	889.6
			8.8 [1]	12.2	30.0	59.8	104.8 [4]	266.4 [5]	519.3	898.0	1331.5	1799.2
			50 [1]	7.6	18.7	37.4	65.5	166.5	324.5	561.3	832.2	1124.5
			70 [1]	10.7	26.2	52.3	91.7 [4]	233.1	454.4	785.8	1165.1	1574.3
Partial safety factor	γ_{Ms} [3]		4.6 [1]	1.67								
			8.8 [1]	1.25								
			50 [1]	2.38								
			70 [1]	1.56								

[1] Materials acc. to Annex A2 and A3, Table A1
[2] In conformity to EN ISO 898-1:2013
[3] In absence of other national regulations
[4] In combination with anchor channel K 28/15 limited to 85.5 Nm
[5] In combination with anchor channel K 38/17 limited to 234.0 Nm

Table C9: Characteristic resistances under combined tension and shear load

Anchor channel		**K 28/15**	**K 38/17**	**K 20/25**	**W 40+**	**K 50/30**	**W 50+**	**K 53/34**	**W 55/42**	**K 72/48**
				W 40/22		**W 50/30**		**W 53/34**		**W 72/48**
Steel failure: Local failure by flexure of channel lips and failure by flexure of channel										
Product factor	k_{13}	2.0	2.0	2.0	2.0	2.0	1.0 [1]	2.0	2.0	2.0
						1.0 [1]		1.0 [1]		1.0 [1]
Steel failure: Failure of anchor and connection between anchor and channel										
Product factor	k_{14}	1.0 [2]	1.0 [2]	1.0 [2]	1.0 [2]	1.0 [2]	1.0 [2]	1.0 [2]	1.0 [2]	1.0 [2]

[1] k_{13} can be taken as 2.0 if $V_{Rd,s,l}$ is limited to $N_{Rd,s,l}$
[2] k_{14} can be taken as 2.0 if max($V_{Rd,s,a}$; $V_{Rd,s,c}$) is limited to min($N_{Rd,s,a}$; $N_{Rd,s,c}$)

JORDAHL - Anchor Channel JTA

Performance
Characteristic resistances under shear load – JORDAHL-Channel bolts
Characteristic resistances under combined tension and shear load

Annex C5

Table C10: Characteristic resistances under fire exposure

Anchor channel					K 28/15	K 38/17	K 40/25 / W 40/22	W 40+	K 50/30 / W 50/30	W 50+	K 53/34 / W 53/34	W 55/42	K 72/48 / W 72/48
Steel failure: Anchor, connection between anchor and channel, local flexure of channel lips, channel bolts													
Characteristic resistance	R30	M8	$N_{Rk,s,fi}$ = $V_{Rk,s,fi}$	[kN]	1.0	-	-	-	-	-	-	-	-
		M10			1.0	1.7	1.9	1.9	1.9	1.9	1.9	-	-
		M12			1.9	1.7	1.9 / 3.0	3.0	2.5	2.5	2.5	-	-
		M16			-	3.2	3.6 / 7.8	7.8	4.0 / 6.0	6.0	6.0	6.3	-
		M20			-	-	-	-	4.0 / 9.5	9.5	8.9 / 10.1	10.3	10.3
		M24			-	-	-	-	-	-	-	14.8	14.8
	R60	M8			0.8	-	-	-	-	-	-	-	-
		M10			0.8	1.5	1.5	1.5	1.5	1.5	1.5	-	-
		M12			1.3	1.5	1.5 / 2.6	2.6	2.5	2.5	2.5	-	-
		M16			-	2.4	3.6 / 5.3	5.3	3.5 / 4.5	4.5	4.5	4.8	-
		M20			-	-	-	-	3.5 / 7.1	7.1	6.5 / 7.5	7.6	7.6
		M24			-	-	-	-	-	-	-	11.1	11.1
	R90	M8			0.6	-	-	-	-	-	-	-	-
		M10			0.6	1.0	1.1	1.1	1.1	1.1	1.1	-	-
		M12			0.7	1.0	1.1 / 1.6	1.6	1.6	1.6	1.6	-	-
		M16			-	1.4	2.0 / 2.9	2.9	2.5 / 3.0	3.0	3.0	3.3	-
		M20			-	-	-	-	2.5 / 4.8	4.8	4.2 / 4.8	4.9	4.9
		M24			-	-	-	-	-	-	-	7.3	7.3
	R120	M8			0.5	-	-	-	-	-	-	-	-
		M10			0.5	0.8	0.8	0.8	0.8	0.8	0.8	-	-
		M12			0.5	0.8	0.8 / 1.1	1.1	1.2	1.2	1.2	-	-
		M16			-	1.0	1.2 / 1.6	1.6	2.1 / 2.3	2.2 / 2.3	2.2 / 2.3	2.6	-
		M20			-	-	-	-	2.1 / 3.6	3.6	3.0 / 3.5	3.6	3.6
		M24			-	-	-	-	-	-	-	5.4	5.4
Partial safety factor [1]			$\gamma_{Ms,fi}$		1.0								

[1] In absence of other national regulations

JORDAHL - Anchor Channel JTA

Performance
Characteristic resistances under fire exposure

Annex C6

Fig. 1

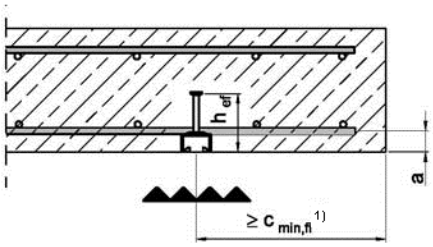

Fig. 2

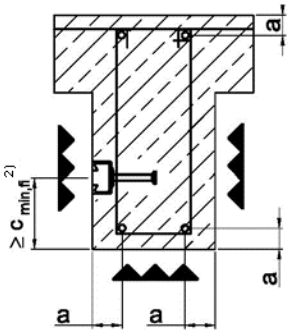

Table C11: Min. axis distance under fire exposure [3)]

Anchor channel				K 28/15	K 38/17	K 40/25 W 40/22 W 40+	K 50/30 W 50/30 W 50+	K 53/34 W53/34	W 55/42	K 72/48 W 72/48
Min. axis distance	R30	a	[mm]	35	35	35	35	50	50	50
	R60			35	35	35	35	50	50	50
	R90			45	45	45	45	50	50	50
	R120			60	60	60	60	65	70	70

[1)] Fire exposure from one side only. $c_{min,fi}$ acc. to TR 020

[2)] Fire exposure from more than one side. $c_{min,fi}$ acc. to TR 020

[3)] The reinforced concrete has to be built acc. to EN 1992. The fire resistance class of the reinforced concrete is not part of this ETA.

JORDAHL - Anchor Channel JTA

Performance
Concrete cover under fire exposure

Annex C7

Table C13: Combinations of anchor channels and channel bolts for fatigue tension loading

Anchor channel	Anchor		Channel bolt			
	Type	d_1 [mm]	Type	d	Strength	Finish
W 40/22	R	9.0	JC	M12	8.8	z.p. h.d.g.
				M16	4.6, 8.8	
W 40+		10.8	JC	M12	8.8	
				M16	4.6, 8.8	
W 50/30		9.0	JB	M16	4.6, 8.8	
				M20	4.6, 8.8	
W 50+		10.0	JB	M16	4.6, 8.8	
				M20	4.6, 8.8	
W 53/34		11.5	JB	M16	8.8	
				M20	8.8	

Table C14: Characteristic resistances under fatigue tension load with n load cycles without static preload (N_{Ed} = 0) - Steel failure (Design method I acc. to EOTA TR 050, November 2015)

Anchor channel		W 40/22	W 40+	W 50/30	W 50+	W 53/34
	Load cycles n	$\Delta N_{Rk,s;0;n}$ [kN]				
Characteristic resistances under fatigue tension load without static preload	$\leq 10^4$	11.7	12.8	16.5	16.5	22.2
	$\leq 10^5$	6.7	7.7	9.8	9.8	13.2
	$\leq 10^6$	3.8	4.7	5.8	5.8	7.9
	$\leq 2 \cdot 10^6$	3.2	4.0	4.9	4.9	6.7
	$\leq 5 \cdot 10^6$	2.6	3.3	4.0	4.0	5.5
	$\leq 10^8$	1.2				
	$\geq 10^8$	-				

Table C15: Reduction factor for concrete cone and pullout failure without static preload (N_{Ed} = 0) (Design method I acc. to EOTA TR 050, November 2015)

	Load cycles n	$\eta_{c,fat} = \eta_{p,fat}$ [-]
Reduction factor for $\Delta N_{Rk,c;0;n} = \eta_{c,fat} \cdot N_{Rk,c}$ [1)] $\Delta N_{Rk,p;0;n} = \eta_{p,fat} \cdot N_{Rk,p}$ [2)]	$\leq 10^4$	0.736
	$\leq 10^5$	0.665
	$\leq 10^6$	0.600
	$\leq 2 \cdot 10^6$	0.582
	$\leq 5 \cdot 10^6$	0.559
	$\leq 6 \cdot 10^7$	0.500
	$\geq 6 \cdot 10^7$	0.500

[1)] Static resistance according to Annex C3 and EOTA TR 047, March 2018 or FprEN 1992-4:2016
[2)] Static resistance according to Annex C3

JORDAHL - Anchor Channel JTA

Performance
Characteristic resistances under fatigue tension load - Design method I

Annex C8

Table C16: Characteristic limit resistances under fatigue tension load without static preload ($n \rightarrow \infty$, $N_{Ed} = 0$) – Steel failure (Design method II acc. to EOTA TR 050, November 2015)

Anchor channel		**W 40/22**	**W 40+**	**W 50/30**	**W 50+**	**W 53/34**
Characteristic resistances under fatigue tension load	$\Delta N_{Rk,s;0;\infty}$ [kN]	-	3.3	4.0	4.0	5.5

Table C17: Characteristic limit resistances under fatigue tension load without static preload ($n \rightarrow \infty$, $N_{Ed} = 0$) – Concrete cone and pullout failure (Design method II acc. to EOTA TR 050, November 2015)

Characteristic resistances under fatigue tension load	$\eta_{c,fat} = \eta_{p,fat}$ [-]
$\Delta N_{Rk,c;0;\infty} = \eta_{c,fat} \cdot N_{Rk,c}$ [1)] $\Delta N_{Rk,p;0;\infty} = \eta_{p,fat} \cdot N_{Rk,p}$ [2)]	0.5

[1)] Static resistance acc. to Annex C3 and EOTA TR 047, March 2018 or FprEN 1992-4:2016

[2)] Static resistance acc. to Annex C3

In absence of other national regulations the following safety factors are recommended for design method I and II for all modes of failure (Table C14 to C17) acc. to EOTA TR 050:

$\gamma_{Ms,fat} = 1.35$ (steel)

$\gamma_{Mc,fat} = \gamma_{Mp,fat} = 1.50$ (concrete)

JORDAHL - Anchor Channel JTA

Performance
Characteristic resistances under fatigue tension load - Design method II

Annex C9